Wireless Device

SM-A500F(SS/DS)/A500FQ

Common

SERVICE Manual

Wireless Device

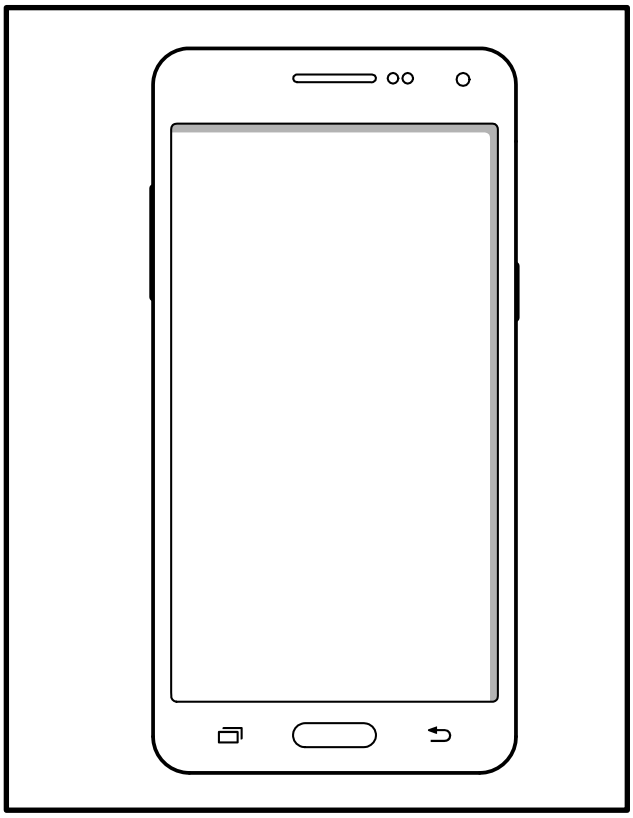

CONTENTS

1. Safety Precautions
2. Specification
3. Product Function
4. Exploded View and Parts list
5. MAIN Electrical Parts List
6. Level 1 Repair
7. Level 2 Repair
8. Level 3 Repair
9. Reference data

Notice: All functionality, features, specifications, and other product information provided in this document, including but not limited to, benefits, design, pricing, components, performance, availability, and capabiliti -es of the product are subject to change without notice. Samsung reserves the right to alter this doc -ument or the product described herein at anytime, without obligation to provide notification of such changes.

SAMSUNG
ELECTRONICS

This Service Manual is a property of Samsung Electronics Co.,Ltd.
Any unauthorized use of Manual can be punished under applicable International and/or domestic law.

© Samsung Electronics Co.,Ltd.

2014. 11. Rev.1.1

1. Safety Precautions

1-1. Repair Precaution

Before attempting any repair or detailed tuning, shield the device from RF noise or static electricity discharges.

Use only demagnetized tools that are specifically designed for small electronic repairs, as most electronic parts are sensitive to electromagnetic forces.

Use only high quality screwdrivers when servicing products. Low quality screwdrivers can easily damage the heads of screws.

Use only conductor wire of the properly gauge and insulation for low resistance, because of the low margin of error of most testing equipment.
We recommend 22-gauge twisted copper wire.

Hand-soldering is not recommended, because printed circuit boards (PCBs) can be easily damaged, even with relatively low heat. Never use a soldering iron with a power rating of more than 100 watts and use only lead-free solder with a melting point below 250°C (482°F).

Prior to disassembling the battery charger for repair, ensure that the AC power is disconnected. Always use the replacement parts that are registered in the SEC system. Third-party replac ement parts may not function properly.

Confidential and proprietary-the contents in this service guide subject to change without prior notice.
Distribution, transmission, or infringement of any content or data from this document without Samsung's written authorization is strictly prohibited.

1-2. ESD(Electrostatically Sensitive Devices) Precaution

Many semiconductors and ESDs in electronic devices are particularly sensitive to static discha rge and can be easily damaged by it. We recommend protecting these components with cond uctive anti-static bags when you store or transport them.

Always use an anti-static strap or wristband and remove electrostatic buildup or dissipate static electricity from your body before repairing ESDs.

Ensure that soldering irons have AC adapter with ground wires and that the ground wires are properly connected.

Use only desoldering tools with plastic tips to prevent static discharge.

Properly shield the work environment from accidental electrostatic discharge before opening packages containing ESDs.

The potential for static electricity discharge may be increased in low humidity environments, such as air-conditioned rooms. Increase the airflow to the working area to decrease the chance of accidental static electricity discharges.

Confidential and proprietary-the contents in this service guide subject to change without prior notice.
Distribution, transmission, or infringement of any content or data from this document without Samsung's written authorization is strictly prohibited.

2. Specification

2-1. GSM General Specification

	GSM850	EGSM 900	DCS1800	PCS1900	WCDMA 2100	WCDMA 1900	WCDMA 900	WCMDA 850
Freq. Band[MHz] Uplink/ Downlink	824~849 869~894	880~915 925~960	1710~1785 1805~1880	1850~1910 1930~1990	1922~1977 2110~2170	1852~1907 1932~1987	880~915 925~960	824~849 869~894
ARFCN range	128~251	0~124 & 975~1023	512~885	512~810	UL:9612~9888 DL:10562~10838	UL:9262~9538 DL:9662~9938	UL: 2712~2863 DL: 2937~3088	UL: 4132~4233 DL: 4357~4458
Tx/Rx spacing	45MHz	45MHz	95MHz	80MHz	190MHz	80MHz	45MHz	45MHz
Mod. Bit rate/ Bit Period	270.833kbps 3.692us	270.833kbps 3.692us	270.833kbps 3.692us	270.833kbps 3.692us	3.84Mcps	3.84Mcps	3.84Mcps	3.84Mcps
Time Slot Period/ Frame Period	576.9us 4.615ms	576.9us 4.615ms	576.9us 4.615ms	576.9us 4.615ms	FrameLength: 10ms Slotlength: 0.667ms	FrameLength: 10ms Slotlength: 0.667ms	FrameLength: 10ms Slotlength: 0.667ms	FrameLength: 10ms Slotlength: 0.667ms
Modulation	0.3GMSK	0.3GMSK	0.3GMSK	0.3GMSK	QPSK, HPSK	QPSK, HPSK	QPSKHQPSK	QPSKHQPSK
MS Power	33dBm~5dBm	33dBm~5dBm	30dBm~0dBm	30dBm~0dBm	24dBm~-50dBm	24dBm~-50dBm	24dBm~ -50dBm	24dBm~ -50dBm
Power Class	5pcl ~ 19pcl	5pcl ~ 19pcl	0pcl ~ 15pcl	0pcl ~ 15pcl	3(max+24dBm)	3(max+24dBm)	3(max+24dBm)	3(max+24dBm)
Sensitivity	-102dBm	-102dBm	-100dBm	-100dBm	-106.7dBm	-106.7dBm	-106.7dBm	-106.7dBm
TDMA Mux	8	8	8	8	8	8	8	8
Cell Radius	35Km	35Km	2Km	2Km	2Km	2Km	2Km	2Km

Confidential and proprietary-the contents in this service guide subject to change without prior notice.
Distribution, transmission, or infringement of any content or data from this document without Samsung's written authorization is strictly prohibited.

2-2. GSM Tx Power Class

TX Power control level	GSM850
5	33±2 dBm
6	31±2 dBm
7	29±2 dBm
8	27±2 dBm
9	25±2 dBm
10	23±2 dBm
11	21±2 dBm
12	19±2 dBm
13	17±2 dBm
14	15±2 dBm
15	13±2 dBm
16	11±3 dBm
17	9±3dBm
18	7±3 dBm
19	5±3 dBm

TX Power control level	EGSM900
5	33±2 dBm
6	31±2 dBm
7	29±2 dBm
8	27±2 dBm
9	25±2 dBm
10	23±2 dBm
11	21±2 dBm
12	19±2 dBm
13	17±2 dBm
14	15±2 dBm
15	13±2 dBm
16	11±3 dBm
17	9±3dBm
18	7±3 dBm
19	5±3 dBm

TX Power control level	DCS1800
0	30±3 dBm
1	28±3 dBm
2	26±3 dBm
3	24±3 dBm
4	22±3 dBm
5	20±3 dBm
6	18±3 dBm
7	16±3 dBm
8	14±3 dBm
9	12±4 dBm
10	10±4 dBm
11	8±4 dBm
12	6±4 dBm
13	4±4 dBm
14	2±5 dBm
15	0±5 dBm

TX Power control level	PCS1900
0	30±3 dBm
1	28±3 dBm
2	26±3 dBm
3	24±3 dBm
4	22±3 dBm
5	20±3 dBm
6	18±3 dBm
7	16±3 dBm
8	14±3 dBm
9	12±4 dBm
10	10±4 dBm
11	8±4 dBm
12	6±4 dBm
13	4±4 dBm
14	2±5 dBm
15	0±5 dBm

Confidential and proprietary-the contents in this service guide subject to change without prior notice.
Distribution, transmission, or infringement of any content or data from this document without Samsung's written authorization is strictly prohibited.

2-3. LTE General Specification

	LTE Band1	LTE Band3	LTE Band5	LTE Band7	LTE Band8	LTE Band20
Freq. Band[MHz] Uplink/ Downlink	1920~1980 2110~2170	1710~1785 1805~1880	824~849 869~894	2500~2570 2620~2690	880~915 925~960	832~862 791~821
ARFCN range	UL: 18000~18599 DL: 0~599	UL: 19200~19949 DL: 1200~1949	UL: 20400~20649 DL: 2400~2649	UL: 20750~21449 DL: 2750~3449	UL: 21450-21799 DL: 3450-3799	UL: 24150~24449 DL: 6150~6449
Tx/Rx spacing	190MHz	95MHz	45MHz	120MHz	45MHZ	-41MHz
Channel Bandwidth	5/10/15/20 MHz	1.4/3/5/10/15/20 MHz	1.4/3/5/10 MHz	5/10/15/20 MHz	1.4/3/5/10MHz	5/10/15/20 MHz
Modulation	QPSK,16/64QAM	QPSK,16/64QAM	QPSK,16/64QAM	QPSK,16/64QAM	QPSK,16/64QAM	QPSK,16/64QAM
MS Power (MPR)	-35~25.7 dBm	-35~25.7 dBm	-35~25.7 dBm	-35~25.7 dBm	-35~25.7 dBm	-35~25.7 dBm
Sensitivit (QPSK) (BW 10MHz)	-97dBm	-94dBm	-95dBm	-95dBm	-94dBm	-94dBm
Cell Radius	>5Km	>5Km	>5Km	>5Km	>5Km	>5Km

Confidential and proprietary-the contents in this service guide subject to change without prior notice.
Distribution, transmission, or infringement of any content or data from this document without Samsung's written authorization is strictly prohibited.

3. Operation Instruction and Installation

Main Function

- Android OS: KitKat
- MSM8916 (Quad 1.2 Ghz)
- 16G Bytes (eMMC) + 2GByte LPDDR
- 5.0" on-Cell Touch AMOLED (1280 x 720(HD))
- 13MP Camera + 5MP Front Camera
- GPS / BT v4.0 / USB v2.0 / WiFi (802.11 a/b/g/n/ac)
- Sensors: Gyro/Accelerometer, Proximity, Light, RGB, Hall IC
- Additional :
  - FM Radio, Wifi Direct
  - Charger 5V / 1.55A
  - Data Cable 3.3pi, 1.0m
  - Ear phone 3.5p, 4pin

Confidential and proprietary-the contents in this service guide subject to change without prior notice.
Distribution, transmission, or infringement of any content or data from this document without Samsung's written authorization is strictly prohibited.

4. Exploded View and Parts List

4-1. Cellular phone Exploded View

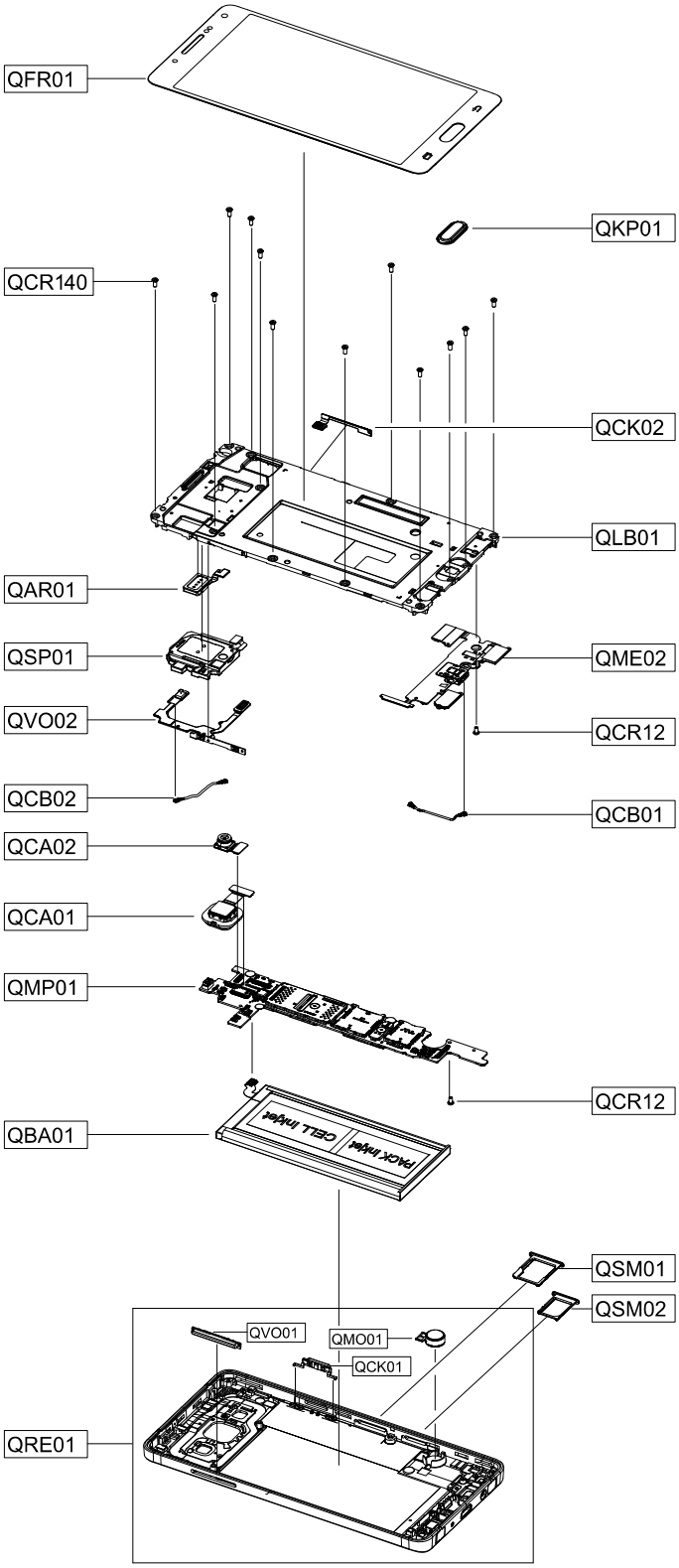

Confidential and proprietary-the contents in this service guide subject to change without prior notice.
Distribution, transmission, or infringement of any content or data from this document without Samsung's written authorization is strictly prohibited.

5. MAIN Electrical Parts List

SEC CODE	Design LOC	Description
0404-001250	D4000	DIODE
0406-001361	ZD6002	DIODE
0406-001413	ZD5002	DIODE
0406-001459	ZD5015	DIODE
0406-001553	ZD2000,ZD2001	DIODE
0406-001561	ZD5014	DIODE
0406-001568	ZD5005,ZD5006	DIODE
0406-001642	ZD5003,ZD5004,ZD6000	DIODE
0406-001642	ZD6001	DIODE
0406-001645	ZD5007,ZD5008,ZD5009	DIODE
0406-001645	ZD5010,ZD5011,ZD5016	DIODE
0406-001667	ZD7000,ZD7001	DIODE
0406-001675	ZD4000	DIODE
0406-001676	ZD5012,ZD5013	DIODE
0504-001171	Q4000,Q7000	TR-DIGITAL
0505-002341	Q4001	FET-SILICON
0505-003403	Q6000	FET-SILICON
0601-003398	LED7000	LED
1001-001841	U7002	IC
1001-001903	U5004	IC
1003-002415	U6008	IC
1108-000573	UME4000	MEMORY
1201-003786	U2000	IC
1201-003788	U1003	IC
1201-003866	PA1000	IC
1201-003876	U5000	IC
1201-003894	PA1001	IC
1203-007324	U6003,U6004	IC
1203-007790	U5002,U6006	IC
1203-007791	U1002,U6002	IC
1203-007796	U6000,U6007,U7000	IC
1203-007842	U6001	IC
1203-007992	U4001	IC
1203-008167	U7004	IC
1203-008288	U2002	IC
1203-008295	U6005	IC

Confidential and proprietary-the contents in this service guide subject to change without prior notice.
Distribution, transmission, or infringement of any content or data from this document without Samsung's written authorization is strictly prohibited.

1203-008324	U4000	IC
1205-004819	U2001	IC
1205-005106	U5001	IC
1205-005142	U2004	IC
1205-005159	U2003	IC
1205-005162	UCP3000	IC
1209-002204	U7003	IC
1209-002318	U7001	IC
1404-001724	TH2000,TH3000	THERMISTOR
2007-000148	R3025,R3033,R7007	R-CHIP
2007-007315	R2002,R3007	R-CHIP
2007-007480	R5024	R-CHIP
2007-007573	R5036	R-CHIP
2007-007589	R2001	R-CHIP
2007-007741	R7002	R-CHIP
2007-008045	R4027,R5029,R5030	R-CHIP
2007-008045	R5032,R7000,R7009	R-CHIP
2007-008045	R7012,R7013,R7015	R-CHIP
2007-008052	R5004,R6000,R6007	R-CHIP
2007-008052	R6008,R7001	R-CHIP
2007-008055	R4029,R5019,R6004	R-CHIP
2007-008055	R6012	R-CHIP
2007-008057	R7005	R-CHIP
2007-008210	R1000	R-CHIP
2007-008419	R4028,R5001,R5002	R-CHIP
2007-008419	R5027	R-CHIP
2007-008420	R3038	R-CHIP
2007-008483	R4015,R4016,R4017	R-CHIP
2007-008483	R4018,R4019,R4020	R-CHIP
2007-008483	R4021,R4022	R-CHIP
2007-008516	R3008,R3009,R3021	R-CHIP
2007-008516	R3022,R3046,R3048	R-CHIP
2007-008516	R3051,R3053,R4014	R-CHIP
2007-008516	R5008,R5013,R5015	R-CHIP
2007-008516	R5034,R6002,R6009	R-CHIP
2007-008516	R6010,R6011,R6021	R-CHIP
2007-008516	R6022,R6023,R6024	R-CHIP

Confidential and proprietary-the contents in this service guide subject to change without prior notice.
Distribution, transmission, or infringement of any content or data from this document without Samsung's written authorization is strictly prohibited.

2007-008516	R7008,R7016	R-CHIP
2007-008531	R5017	R-CHIP
2007-008582	R1001,R1002	R-CHIP
2007-008588	R3010,R3011,R3013	R-CHIP
2007-008588	R3014,R3015,R3016	R-CHIP
2007-008588	R3017,R3018,R3019	R-CHIP
2007-008588	R3020,R3023,R3024	R-CHIP
2007-008588	R3026,R3027,R3029	R-CHIP
2007-008588	R3030,R3031,R3032	R-CHIP
2007-008774	R5012,R5014	R-CHIP
2007-008788	R3037	R-CHIP
2007-008806	R1006	R-CHIP
2007-008809	R6006	R-CHIP
2007-009084	R2003,R3045,R4026	R-CHIP
2007-009084	R6014	R-CHIP
2007-009111	R7003	R-CHIP
2007-009155	R5033,R7004	R-CHIP
2007-009157	R3039,R4003,R4004	R-CHIP
2007-009157	R4005	R-CHIP
2007-009170	R5023	R-CHIP
2007-009212	R7010	R-CHIP
2007-009223	R5021	R-CHIP
2007-009233	R1005,R2004	R-CHIP
2007-009358	R2000	R-CHIP
2007-009361	R1004	R-CHIP
2007-009766	R5037,R5038	R-CHIP
2007-009793	R5022	R-CHIP
2007-009805	R1003	R-CHIP
2007-009838	R5025	R-CHIP
2007-009866	R6026	R-CHIP
2007-009920	R3012,R4030,R4031	R-CHIP
2007-010856	R7006	R-CHIP
2007-011043	R3006	R-CHIP
2007-011648	R5026	R-CHIP
2203-000425	C5030	C-CERAMIC,CHIP
2203-000679	C6008	C-CERAMIC,CHIP
2203-000725	C6043	C-CERAMIC,CHIP

Confidential and proprietary-the contents in this service guide subject to change without prior notice.
Distribution, transmission, or infringement of any content or data from this document without Samsung's written authorization is strictly prohibited.

2203-000812	C4065,C4067	C-CERAMIC,CHIP
2203-001153	C2064,C2074	C-CERAMIC,CHIP
2203-005482	C4064,C5012	C-CERAMIC,CHIP
2203-005682	C1031,C1033,C1095	C-CERAMIC,CHIP
2203-005682	C2029,C2076,C2097	C-CERAMIC,CHIP
2203-005682	C4060,C4087,C5004	C-CERAMIC,CHIP
2203-005682	C5005,C5010,C5011	C-CERAMIC,CHIP
2203-005682	C5031	C-CERAMIC,CHIP
2203-005717	C6000,C6001,C6002	C-CERAMIC,CHIP
2203-005717	C6004,C6009,C6010	C-CERAMIC,CHIP
2203-005717	C6011	C-CERAMIC,CHIP
2203-005727	C2082,C2083	C-CERAMIC,CHIP
2203-005729	C5001,C5006,C5007	C-CERAMIC,CHIP
2203-005729	C5014,C5019,C5020	C-CERAMIC,CHIP
2203-005729	C5033	C-CERAMIC,CHIP
2203-005732	C5003,C5008,C5009	C-CERAMIC,CHIP
2203-005732	C5015	C-CERAMIC,CHIP
2203-005734	C5027	C-CERAMIC,CHIP
2203-005736	C1000,C1001,C1007	C-CERAMIC,CHIP
2203-005736	C1021,C1024,C1030	C-CERAMIC,CHIP
2203-005736	C1038,C1044,C1049	C-CERAMIC,CHIP
2203-005736	C1054,C1056,C1057	C-CERAMIC,CHIP
2203-005736	C1061,C1063,C1068	C-CERAMIC,CHIP
2203-005736	C1070,C1073,C1074	C-CERAMIC,CHIP
2203-005736	C1075,C1076,C1078	C-CERAMIC,CHIP
2203-005736	C1080,C1087,C1088	C-CERAMIC,CHIP
2203-005736	C1090,C1091,C1093	C-CERAMIC,CHIP
2203-005736	C1097,C1098,C1101	C-CERAMIC,CHIP
2203-005736	C1102,C1107,C1117	C-CERAMIC,CHIP
2203-005736	C1119,C1121,C1122	C-CERAMIC,CHIP
2203-005736	C1124,C2011,C2014	C-CERAMIC,CHIP
2203-005736	C2024,C2025,C2026	C-CERAMIC,CHIP
2203-005736	C2054,C2056,C2057	C-CERAMIC,CHIP
2203-005736	C2059,C2060,C2062	C-CERAMIC,CHIP
2203-005736	C2068,C2085,C2086	C-CERAMIC,CHIP
2203-005736	L1054	C-CERAMIC,CHIP
2203-005739	C2090	C-CERAMIC,CHIP

Confidential and proprietary-the contents in this service guide subject to change without prior notice.
Distribution, transmission, or infringement of any content or data from this document without Samsung's written authorization is strictly prohibited.

2203-005742	C1020	C-CERAMIC,CHIP
2203-005789	C1009,C1018,L1030	C-CERAMIC,CHIP
2203-005792	C2087	C-CERAMIC,CHIP
2203-005806	C3023,C4039	C-CERAMIC,CHIP
2203-006121	C2027	C-CERAMIC,CHIP
2203-006194	C3035,C3036	C-CERAMIC,CHIP
2203-006305	C5000	C-CERAMIC,CHIP
2203-006348	C5040	C-CERAMIC,CHIP
2203-006379	C3006,C3032,C3037	C-CERAMIC,CHIP
2203-006379	C3039,C3040,C3041	C-CERAMIC,CHIP
2203-006379	C3043,C3047	C-CERAMIC,CHIP
2203-006399	C2020,C2033,C4061	C-CERAMIC,CHIP
2203-006399	C4062,C4085	C-CERAMIC,CHIP
2203-006400	C1082,C2101	C-CERAMIC,CHIP
2203-006423	C2003,C2004,C2005	C-CERAMIC,CHIP
2203-006423	C2006,C2008,C2009	C-CERAMIC,CHIP
2203-006423	C2010,C2012,C2015	C-CERAMIC,CHIP
2203-006423	C2016,C2021,C2022	C-CERAMIC,CHIP
2203-006423	C2023,C3000,C3003	C-CERAMIC,CHIP
2203-006423	C3008,C3009,C3019	C-CERAMIC,CHIP
2203-006423	C3025,C3026,C3028	C-CERAMIC,CHIP
2203-006423	C3029,C3030,C3031	C-CERAMIC,CHIP
2203-006423	C3048,C3049,C3050	C-CERAMIC,CHIP
2203-006423	C3051,C3052,C3053	C-CERAMIC,CHIP
2203-006423	C3060,C3061,C3062	C-CERAMIC,CHIP
2203-006423	C3066,C3072,C3073	C-CERAMIC,CHIP
2203-006423	C3074,C3075,C3076	C-CERAMIC,CHIP
2203-006423	C3082,C4000,C4001	C-CERAMIC,CHIP
2203-006423	C4002,C4003,C4004	C-CERAMIC,CHIP
2203-006423	C4011,C4017,C4038	C-CERAMIC,CHIP
2203-006423	C4056,C4059,C4063	C-CERAMIC,CHIP
2203-006423	C4068,C4070,C4071	C-CERAMIC,CHIP
2203-006423	C4072,C4073,C4074	C-CERAMIC,CHIP
2203-006423	C4075,C4076,C4077	C-CERAMIC,CHIP
2203-006423	C4078,C4079,C4080	C-CERAMIC,CHIP
2203-006423	C4081,C4083,C5002	C-CERAMIC,CHIP
2203-006423	C5023,C6045,R3054	C-CERAMIC,CHIP

Confidential and proprietary-the contents in this service guide subject to change without prior notice.
Distribution, transmission, or infringement of any content or data from this document without Samsung's written authorization is strictly prohibited.

2203-006437	C4058	C-CERAMIC,CHIP
2203-006462	C2031	C-CERAMIC,CHIP
2203-006556	C1014,C1017,C2047	C-CERAMIC,CHIP
2203-006556	C2081,C4088,C5032	C-CERAMIC,CHIP
2203-006562	C4042,C4043,C7003	C-CERAMIC,CHIP
2203-006562	C7021	C-CERAMIC,CHIP
2203-006620	C2073	C-CERAMIC,CHIP
2203-006642	C2046	C-CERAMIC,CHIP
2203-006648	C2048,C3016,C3017	C-CERAMIC,CHIP
2203-006648	C3018	C-CERAMIC,CHIP
2203-006674	C1027	C-CERAMIC,CHIP
2203-006815	C5021,C5022	C-CERAMIC,CHIP
2203-006839	C1004,C2032,C5034	C-CERAMIC,CHIP
2203-006839	C5039	C-CERAMIC,CHIP
2203-006841	C7002,C7010	C-CERAMIC,CHIP
2203-006872	C4014	C-CERAMIC,CHIP
2203-006896	C1113,C1114,C1115	C-CERAMIC,CHIP
2203-006896	C1116,C5024	C-CERAMIC,CHIP
2203-006968	C1077,C2070	C-CERAMIC,CHIP
2203-006994	C2045,C3034	C-CERAMIC,CHIP
2203-007194	C2075	C-CERAMIC,CHIP
2203-007230	C5013	C-CERAMIC,CHIP
2203-007240	C3063,C3064,C4046	C-CERAMIC,CHIP
2203-007240	C4047,C4048,C4049	C-CERAMIC,CHIP
2203-007240	C4050,C4051,C4052	C-CERAMIC,CHIP
2203-007240	C4053,C4054	C-CERAMIC,CHIP
2203-007270	C2035	C-CERAMIC,CHIP
2203-007271	C4005,C4006,C4007	C-CERAMIC,CHIP
2203-007271	C4008,C4016,C4090	C-CERAMIC,CHIP
2203-007271	C7000	C-CERAMIC,CHIP
2203-007295	C2084	C-CERAMIC,CHIP
2203-007317	C2000,C2001,C4021	C-CERAMIC,CHIP
2203-007317	C4022,C4023,C4024	C-CERAMIC,CHIP
2203-007317	C4028,C4029,C4031	C-CERAMIC,CHIP
2203-007317	C4036,C4066,C4082	C-CERAMIC,CHIP
2203-007317	C4084	C-CERAMIC,CHIP
2203-007369	C1037,C6039,C7004	C-CERAMIC,CHIP

Confidential and proprietary-the contents in this service guide subject to change without prior notice.
Distribution, transmission, or infringement of any content or data from this document without Samsung's written authorization is strictly prohibited.

2203-007369	C7006	C-CERAMIC,CHIP
2203-007391	C2066,C2067	C-CERAMIC,CHIP
2203-007392	C5026	C-CERAMIC,CHIP
2203-007393	C2034,C2069,C2072	C-CERAMIC,CHIP
2203-007393	C7009,C7022	C-CERAMIC,CHIP
2203-007449	C3005,C3010,C3011	C-CERAMIC,CHIP
2203-007449	C3012,C3013,C3014	C-CERAMIC,CHIP
2203-007449	C3015,C3022,C3024	C-CERAMIC,CHIP
2203-007449	C3027,C3033,C3038	C-CERAMIC,CHIP
2203-007449	C3042,C3044,C3045	C-CERAMIC,CHIP
2203-007449	C3046,C3054,C3055	C-CERAMIC,CHIP
2203-007449	C3056,C3057,C3058	C-CERAMIC,CHIP
2203-007449	C3059,C3065,C3067	C-CERAMIC,CHIP
2203-007449	C3068,C3069,C3070	C-CERAMIC,CHIP
2203-007449	C3071,C3077,C3078	C-CERAMIC,CHIP
2203-007449	C3079,C3080,C4013	C-CERAMIC,CHIP
2203-007449	C4019,C4020,C4025	C-CERAMIC,CHIP
2203-007449	C4026,C4027,C4030	C-CERAMIC,CHIP
2203-007449	C4032,C4033,C4034	C-CERAMIC,CHIP
2203-007449	C4035,C4037,C4040	C-CERAMIC,CHIP
2203-007449	C4041,C4057,C4069	C-CERAMIC,CHIP
2203-007449	C5036,C6012,C6013	C-CERAMIC,CHIP
2203-007449	C6040,C6052	C-CERAMIC,CHIP
2203-007775	C4012	C-CERAMIC,CHIP
2203-007781	C4015,C4055,C6025	C-CERAMIC,CHIP
2203-007781	C6035,C6036	C-CERAMIC,CHIP
2203-007795	C1006,C2042,C2061	C-CERAMIC,CHIP
2203-007795	C4045,C4086,C4089	C-CERAMIC,CHIP
2203-007795	C5017,C5028,C6006	C-CERAMIC,CHIP
2203-007795	C6014,C6027,C7005	C-CERAMIC,CHIP
2203-007795	C7016,C7019	C-CERAMIC,CHIP
2203-007796	C1008,C1010,C1083	C-CERAMIC,CHIP
2203-007796	C1094,C2038,C2039	C-CERAMIC,CHIP
2203-007796	C2040,C2041,C2043	C-CERAMIC,CHIP
2203-007796	C4091,C5035,C6003	C-CERAMIC,CHIP
2203-007796	C6016,C6017,C6018	C-CERAMIC,CHIP
2203-007796	C6019,C6020,C6021	C-CERAMIC,CHIP

Confidential and proprietary-the contents in this service guide subject to change without prior notice.
Distribution, transmission, or infringement of any content or data from this document without Samsung's written authorization is strictly prohibited.

2203-007796	C6022,C6023,C6024	C-CERAMIC,CHIP
2203-007796	C6028,C6029,C6030	C-CERAMIC,CHIP
2203-007796	C6032,C6033,C6037	C-CERAMIC,CHIP
2203-007796	C6038,C6041,C6042	C-CERAMIC,CHIP
2203-007796	C7007,C7008,C7012	C-CERAMIC,CHIP
2203-007796	C7013,C7020,C7023	C-CERAMIC,CHIP
2203-008094	C3007,C3020,C3021	C-CERAMIC,CHIP
2203-008094	C7014	C-CERAMIC,CHIP
2203-008097	C1005,C1072,C1085	C-CERAMIC,CHIP
2203-008097	C6044,C7017,C7018	C-CERAMIC,CHIP
2203-008126	C7011	C-CERAMIC,CHIP
2203-008192	C2037,C2052,C2053	C-CERAMIC,CHIP
2203-008243	C2049,C2050,C2051	C-CERAMIC,CHIP
2203-008243	C2055,C2058,C2063	C-CERAMIC,CHIP
2203-008243	C2065,C5025,C7015	C-CERAMIC,CHIP
2203-008470	C3004,C6005,C6007	C-CERAMIC,CHIP
2203-008470	C6031	C-CERAMIC,CHIP
2203-008654	C7001	C-CERAMIC,CHIP
2203-008692	C4044	C-CERAMIC,CHIP
2203-008876	C1084,C1089	C-CERAMIC,CHIP
2203-009048	C4009,C4010,C6026	C-CERAMIC,CHIP
2203-009048	C6034	C-CERAMIC,CHIP
2203-009076	C2036	C-CERAMIC,CHIP
2203-009210	C2079	C-CERAMIC,CHIP
2203-009223	C1029,C1036,C1041	C-CERAMIC,CHIP
2203-009223	C1048,C1050,C1058	C-CERAMIC,CHIP
2203-009223	C1059,C1060,C1064	C-CERAMIC,CHIP
2203-009223	C1065,C1066,C1125	C-CERAMIC,CHIP
2203-009223	C2018,C2095	C-CERAMIC,CHIP
2703-000213	L2008	INDUCTOR-SMD
2703-002309	L5015	INDUCTOR-SMD
2703-002313	L6007,L6008	INDUCTOR-SMD
2703-002901	L1065,L1067	INDUCTOR-SMD
2703-002958	L1055,L2005	INDUCTOR-SMD
2703-002960	L1009	INDUCTOR-SMD
2703-002961	L1014	INDUCTOR-SMD
2703-003004	L1051	INDUCTOR-SMD

Confidential and proprietary-the contents in this service guide subject to change without prior notice.
Distribution, transmission, or infringement of any content or data from this document without Samsung's written authorization is strictly prohibited.

2703-003878	L5007	INDUCTOR-SMD
2703-004000	L2013	INDUCTOR-SMD
2703-004012	C1013,L1001	INDUCTOR-SMD
2703-004014	L1040	INDUCTOR-SMD
2703-004018	L1036,L1038,L2002	INDUCTOR-SMD
2703-004030	C2096,L1064,L1071	INDUCTOR-SMD
2703-004032	C1069,L1000,L1016	INDUCTOR-SMD
2703-004032	L1020,L1062	INDUCTOR-SMD
2703-004034	L2011,L2012	INDUCTOR-SMD
2703-004035	L1007,L1025,L1042	INDUCTOR-SMD
2703-004035	L1046,L1049	INDUCTOR-SMD
2703-004037	L1031,L1041,L1047	INDUCTOR-SMD
2703-004037	L1073	INDUCTOR-SMD
2703-004038	L1019,L1048,L1053	INDUCTOR-SMD
2703-004038	L1060,L1063	INDUCTOR-SMD
2703-004230	L5011	INDUCTOR-SMD
2703-004286	L2001,L2004	INDUCTOR-SMD
2703-004299	L1072,L1075	INDUCTOR-SMD
2703-004302	L1068,L1069,L1074	INDUCTOR-SMD
2703-004302	L1077	INDUCTOR-SMD
2703-004328	L1070,L2018	INDUCTOR-SMD
2703-004364	L1004	INDUCTOR-SMD
2703-004366	C1105,L1011,L2003	INDUCTOR-SMD
2703-004368	C1034,L1005,L1012	INDUCTOR-SMD
2703-004368	L1017,L1018,L1021	INDUCTOR-SMD
2703-004368	L1026,L1027,L1032	INDUCTOR-SMD
2703-004371	L1002,L1061	INDUCTOR-SMD
2703-004684	L3000	INDUCTOR-SMD
2703-004718	L4004	INDUCTOR-SMD
2703-004775	L4000,L5009,L7001	INDUCTOR-SMD
2703-004786	L7002	INDUCTOR-SMD
2703-004903	L2009	INDUCTOR-SMD
2703-005017	L2006	INDUCTOR-SMD
2703-005056	L6002	INDUCTOR-SMD
2703-005061	L4002,L4003	INDUCTOR-SMD
2703-005069	L6003	INDUCTOR-SMD
2703-005100	L5002,L5004	INDUCTOR-SMD

Confidential and proprietary-the contents in this service guide subject to change without prior notice.
Distribution, transmission, or infringement of any content or data from this document without Samsung's written authorization is strictly prohibited.

2703-005109	L4001	INDUCTOR-SMD
2703-005117	L6006	INDUCTOR-SMD
2801-005154	OSC2000	OSCILLATOR
2801-005390	OSC4000	OSCILLATOR
2901-001690	F4000,F4001,F4002	FILTER
2901-001786	F6000,F6001,F6002	FILTER
2901-001786	F6003,F6004	FILTER
2901-001798	F6005,F6006,F6007	FILTER
2901-001798	F6008,F6009,F6010	FILTER
2901-001798	F6011,F6012	FILTER
2904-002162	F2001	FILTER
2904-002168	F2000	FILTER
2904-002206	F2002	FILTER
2910-000200	F1004	FILTER
2910-000256	F1001	FILTER
2911-000278	F1002	FILTER
2911-000318	F1007	FILTER
3301-001659	L1045,L2000	CORE-FERRITE
3301-001729	L6000	CORE-FERRITE
3301-001789	L6001,L6004,L6005	CORE-FERRITE
3301-001885	L5006,L5012,L5013	CORE-FERRITE
3301-001885	L5017,L5018	CORE-FERRITE
3301-001914	L4005	CORE-FERRITE
3301-002035	L5003,L5005	CORE-FERRITE
3301-002078	L5010	CORE-FERRITE
3301-002236	L5000,L5001,L5019	CORE-FERRITE
3301-002236	L5021,L5022	CORE-FERRITE
3301-002239	L5016	CORE-FERRITE
3301-002248	L2007	CORE-FERRITE
3301-002254	L7000	CORE-FERRITE
3301-002286	L5020	CORE-FERRITE
3301-002304	R6001,R6003	CORE-FERRITE
3705-001448	RFS1000	CONNECTOR
3705-001708	RFS1001	CONNECTOR
3705-002014	RFS2000	CONNECTOR
3709-001859	SIM6000	CONNECTOR
3709-001860	SIM6001	CONNECTOR

Confidential and proprietary-the contents in this service guide subject to change without prior notice.
Distribution, transmission, or infringement of any content or data from this document without Samsung's written authorization is strictly prohibited.

3711-007295	HDC6002	CONNECTOR
3711-008010	HDC5002	CONNECTOR
3711-008151	HDC5000	CONNECTOR
3711-008182	HDC6000	CONNECTOR
3711-008511	HDC6001	CONNECTOR
3711-008593	HDC5001	CONNECTOR
3711-008847	BTC4000	CONNECTOR
3712-001518	ANT2001,ANT2002	CONNECTOR
3712-001524	ANT6000,ANT6001	CONNECTOR
3712-001537	ANT1000,ANT1001	CONNECTOR
3712-001537	ANT1002,ANT2000	CONNECTOR
3712-001537	ANT2004,ANT5000	CONNECTOR
3712-001537	ANT5001,ANT5002	CONNECTOR
3712-001537	ANT5003	CONNECTOR
3712-001538	ANT2003	CONNECTOR
4709-001997	F2003	FREQ-DISTRIBUTER
4709-002193	F1000	COUPLER-DIRECTION
GH63-08836A	SC2001,SC2002	SHIELD-CAN G_COVER(A500F)
GH80-03320A	R3000,R3001,R3002	SOLDER-CREAM
GH80-03320A	R3003,R3004,R3005	SOLDER-CREAM
GH98-34829A	SC2005	ASSY COVER-SHIELD CAN H
GH98-34830A	SC2003	ASSY COVER-SHIELD CAN I
GH98-35708A	SC2000	ASSY COVER-SHIELD CAN C_CIS
GH98-35743A	SC2004	ASSY COVER-SHIELD CAN A_CIS

Please consult the GSPN website (Samsung Portal) for the most recent version of the product's part list.

Confidential and proprietary-the contents in this service guide subject to change without prior notice.
Distribution, transmission, or infringement of any content or data from this document without Samsung's written authorization is strictly prohibited.

6. Level 1 Repair

6-1. S/W installation

6-1-1. Required items in order to install S/W

- Installation program: Downloader Program (**Odin3 v3.09.exe with odin3.ini**)
- SM-A500F Mobile Phone
- Data Cable
- JIG BOX (GH81-11888A)
- JIG Cable (GH81-10623A)
- Adapter (GH81-11888K)
- Serial Cable
- Mobile device specific S/W: Binary files

※ Settings

Connect ANYWAY JIG BOX
with JIG CABLE (Phone to JIG)
or PC to Phone Using Data Cable

Chipset Solution Switch - 5

Confidential and proprietary-the contents in this service guide subject to change without prior notice.
Distribution, transmission, or infringement of any content or data from this document without Samsung's written authorization is strictly prohibited.

6-1-2. S/W Installation Program (Downloader program)

■ Open up the S/W Installation Program by executing the **"Odin3 v3.09.exe" ("odin3.ini" file should be in the same folder with odin3 v3.09.exe)**

1. Enable the check mark by click on the following options,

- Check Re-Partition, Auto Reboot, and F. Reset Time
- Check PIT
- Check BL,AP,CP and CSC Files

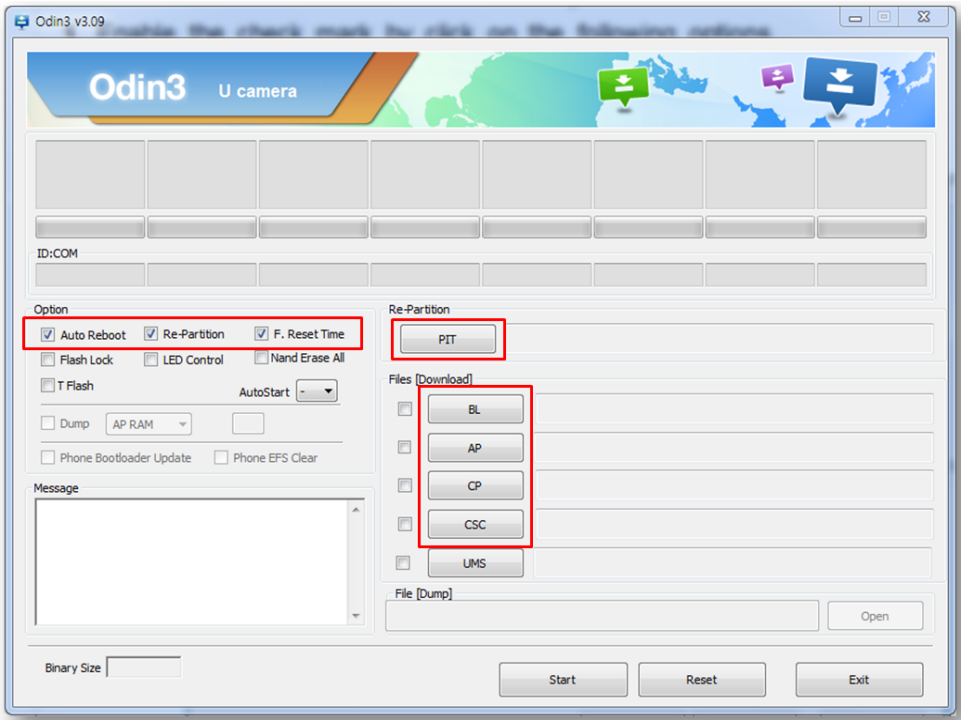

2. Enter into Download Mode

① Enter into Download Mode by pressing Volume Down button and ON/OFF Button simultaneously.

② Next, press Volume Up button.

Confidential and proprietary-the contents in this service guide subject to change without prior notice.
Distribution, transmission, or infringement of any content or data from this document without Samsung's written authorization is strictly prohibited.

3. Connect the device to PC via Data Cable.
Make sure that the one of communication port [ID:COM] box is highlighted in yellow. The device is now connected with the PC and ready to download the binary file into the device.

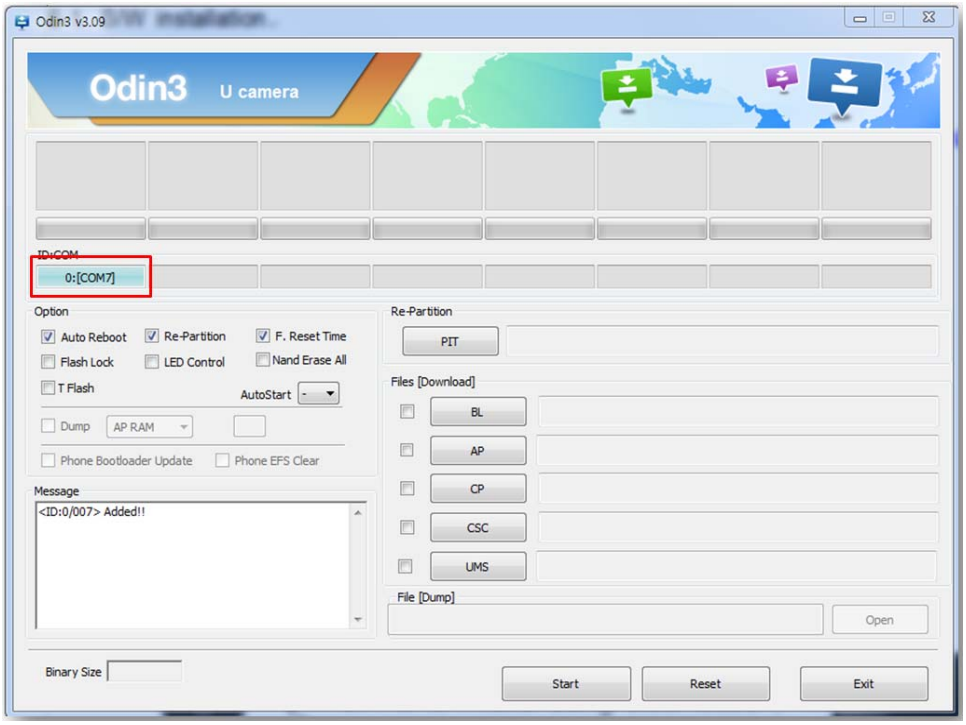

Confidential and proprietary-the contents in this service guide subject to change without prior notice.
Distribution, transmission, or infringement of any content or data from this document without Samsung's written authorization is strictly prohibited.

4. Start downloading binary file into the device by clicking Start Button on the screen. the green colored "PASS!" sign will appear on the upper-left box if the binary file has been successfully downloaded into the device.

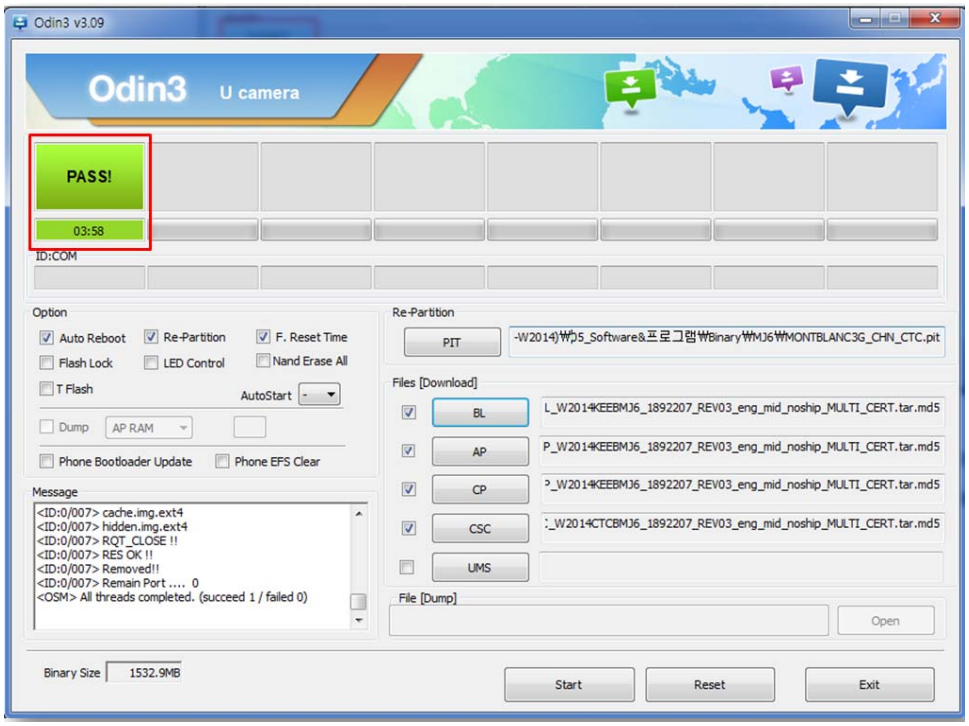

5. Disconnect the device from the Data cable.

6. Once the device boots up, you can check the version of the binary file or name by pressing the following code in sequence;
***#1234#**

Confidential and proprietary-the contents in this service guide subject to change without prior notice.
Distribution, transmission, or infringement of any content or data from this document without Samsung's written authorization is strictly prohibited.

6-2 IMEI writing

6-2-1 Preparation

- New IMEI writing Program has been released.
- Supported Model : Models which CAB files are uploaded on HHPsvc INI File category, instead of ini file.
- Refer to below IMEI writing procedure.(For SM-A500F/G/H Model)

- H/W

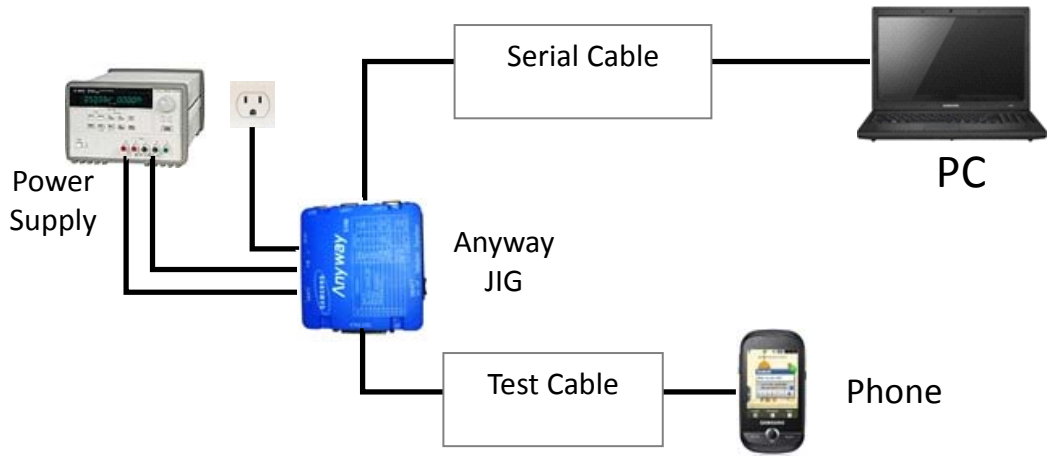

- S/W

① Library Install	To use Daseul, library files should be installed. Refer to SVC Bulletin "(11-82) Daseul (New IMEI writing Program) Library Install guide_rev1.0"
②Launcher	DASEUL_SVC_Launcher_v3_0_10 or higher -Uploaded on HHPsvc Notice
③ Runtime File	1. DASEUL_IMEI_ALL_Runtime_129_r00165 .CAB or higher -Uploaded on HHPsvc Notice 2. Make 'ModelName' folder at the same position with launcher & Runtime file.
④Model File	Copy Model File under the 'Model Name' folder

Confidential and proprietary-the contents in this service guide subject to change without prior notice.
Distribution, transmission, or infringement of any content or data from this document without Samsung's written authorization is strictly prohibited.

6-2-2 IMEI writing Process

1. Run DASEUL_SVC_Launcher_v3.0.10.exe

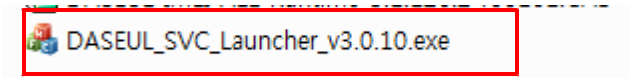

2. Select Service Mode

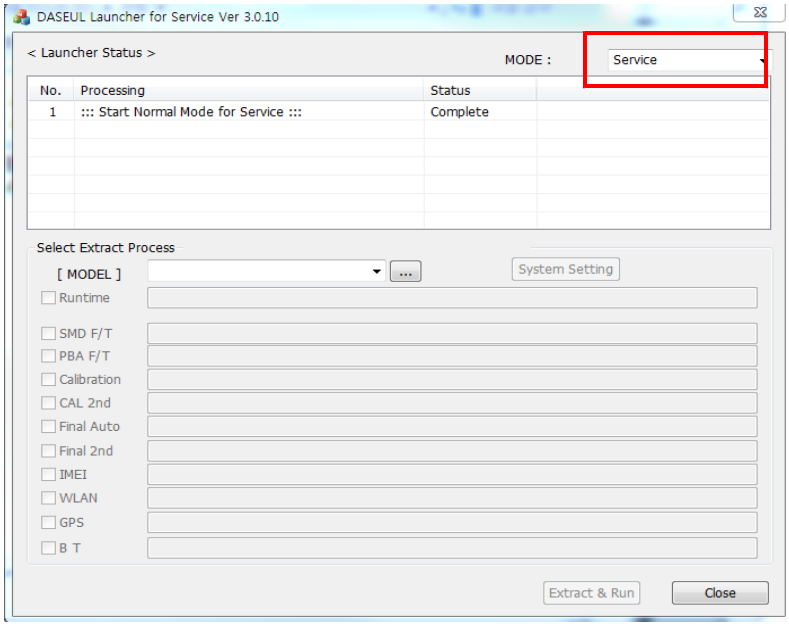

3. Click and Select folder where the Launcher exists

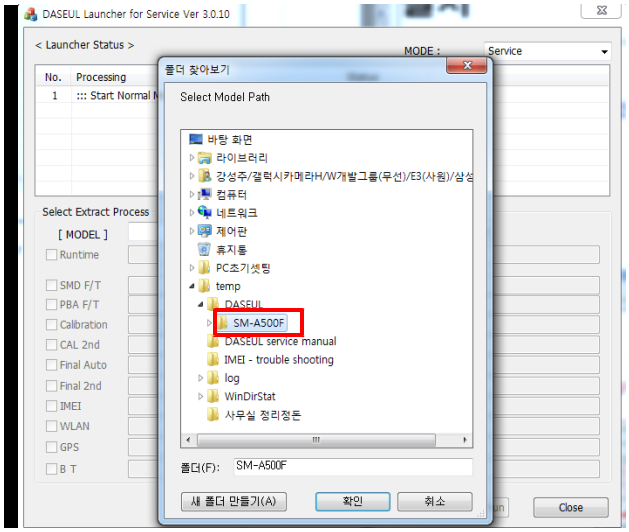

Confidential and proprietary-the contents in this service guide subject to change without prior notice.
Distribution, transmission, or infringement of any content or data from this document without Samsung's written authorization is strictly prohibited.

4. Select Model

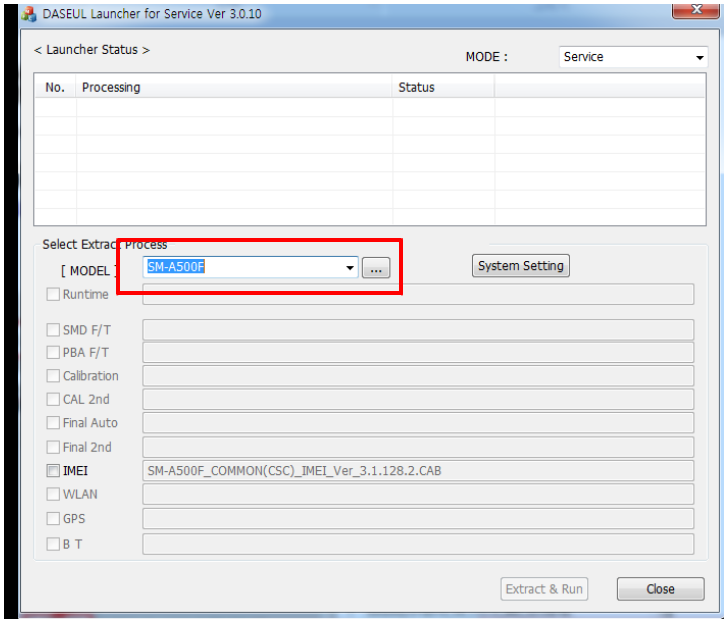

5. Check IMEI and click 'System Setting'

※Once you setup the setting, you don't have to do it again, unless there is change. From second run of the IMEI program, check IMEI and click 'Extract & Run'.

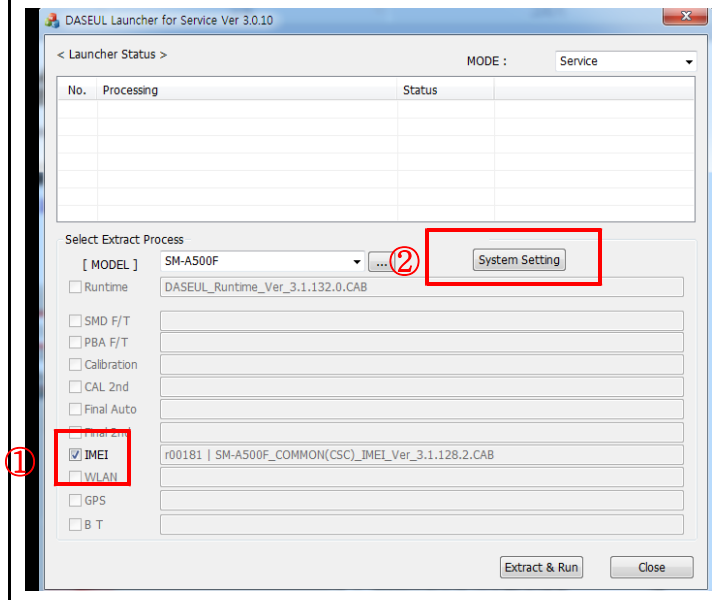

Confidential and proprietary-the contents in this service guide subject to change without prior notice.
Distribution, transmission, or infringement of any content or data from this document without Samsung's written authorization is strictly prohibited.

6. Check ‘IMEI Write / IMEI Check’, and click ‘IMEI SVC & Repair Option’

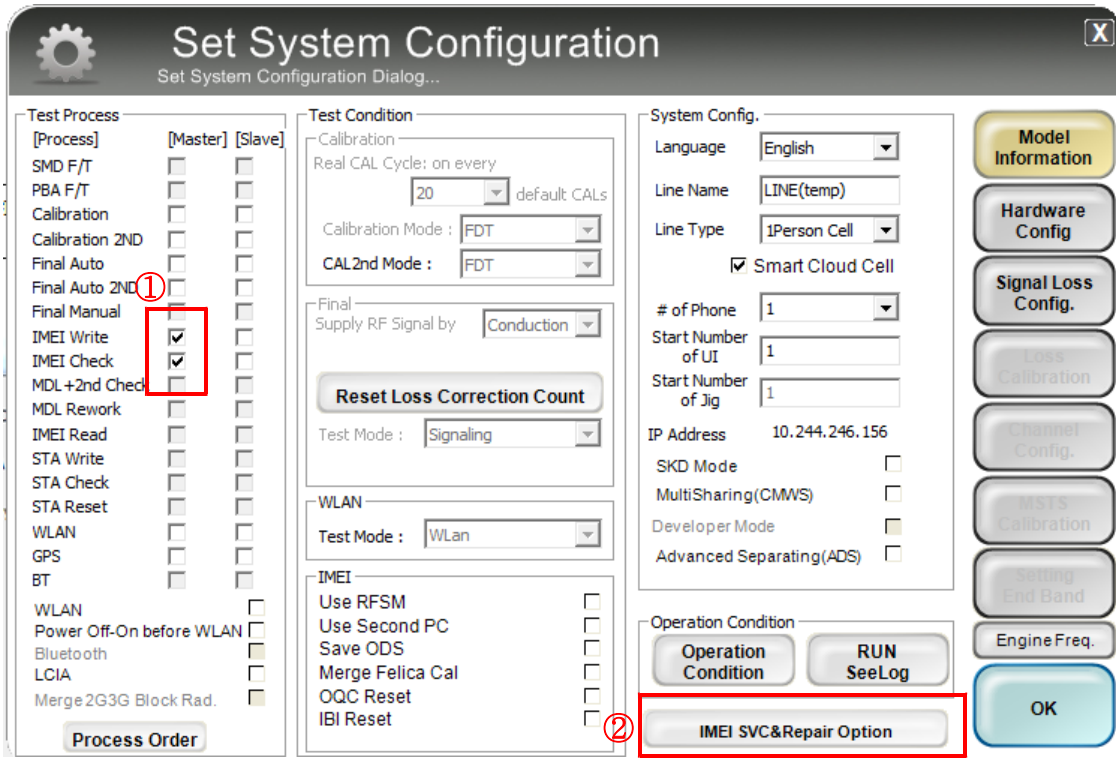

7. Check ‘SVC , User Ticket No’ and click OK

Confidential and proprietary-the contents in this service guide subject to change without prior notice.
Distribution, transmission, or infringement of any content or data from this document without Samsung’s written authorization is strictly prohibited.

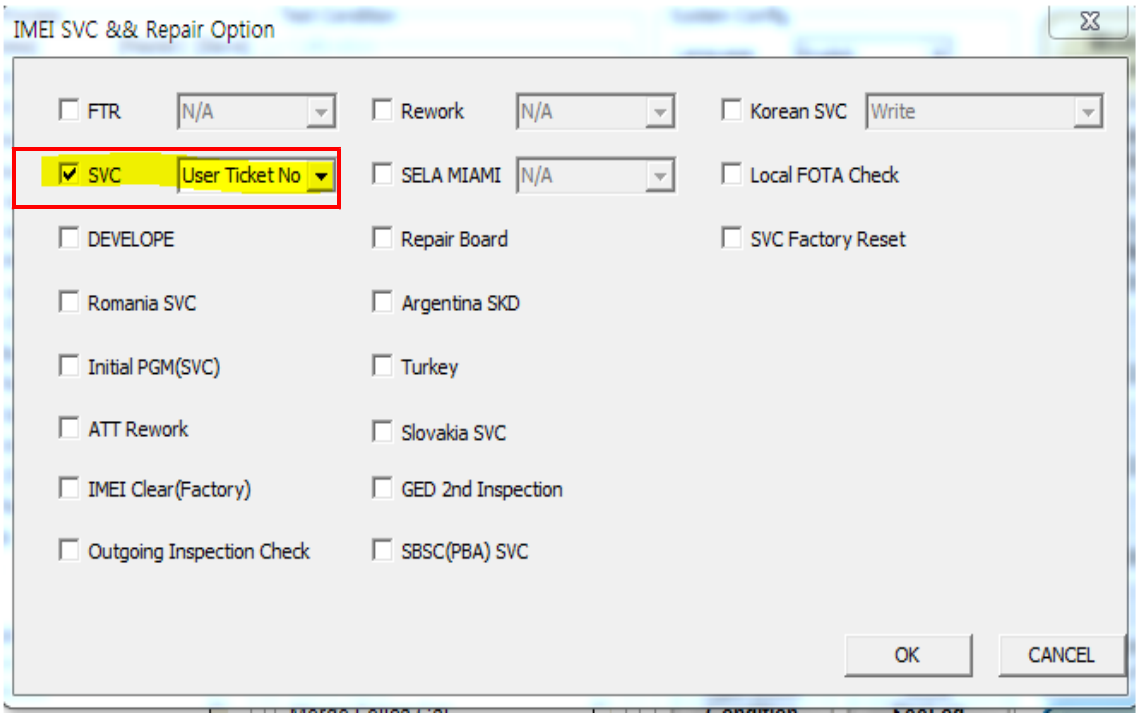

8. Click 'Hardware Config'

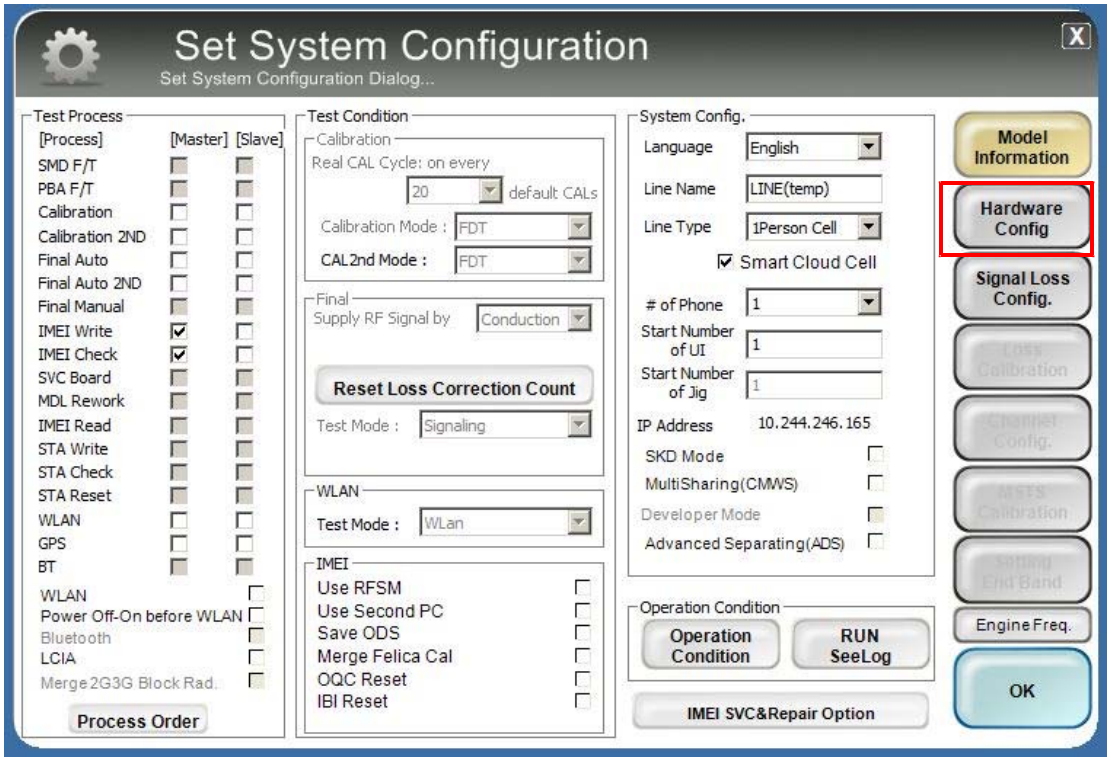

9. Click 'Port Setting'

Confidential and proprietary-the contents in this service guide subject to change without prior notice.
Distribution, transmission, or infringement of any content or data from this document without Samsung's written authorization is strictly prohibited.

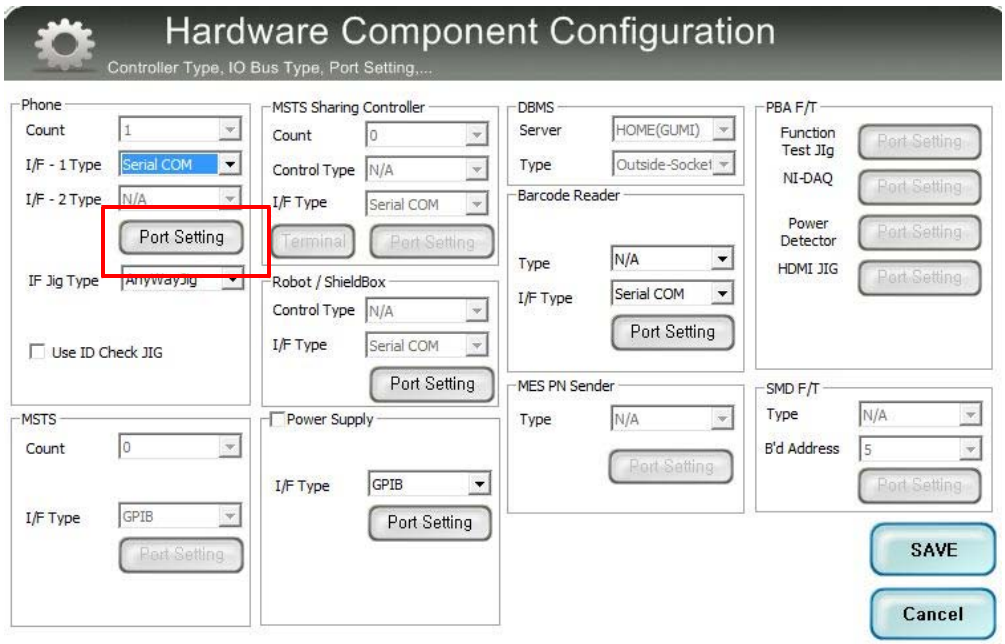

10. Select Port Number and SAVE

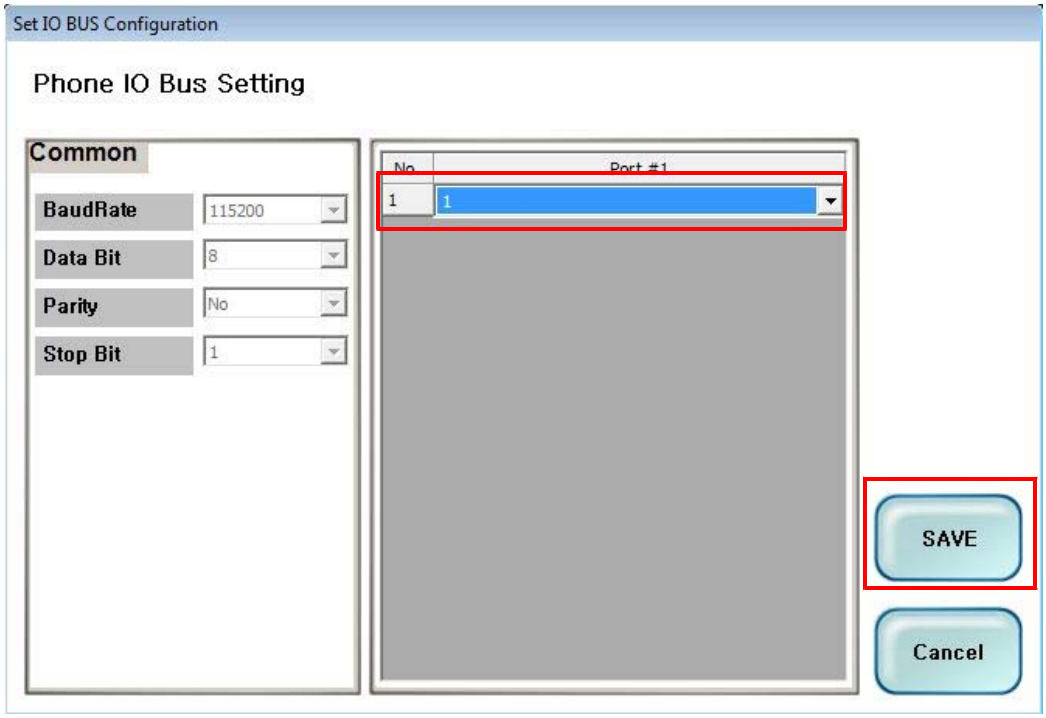

11.Click OK to proceed

Confidential and proprietary-the contents in this service guide subject to change without prior notice.
Distribution, transmission, or infringement of any content or data from this document without Samsung's written authorization is strictly prohibited.

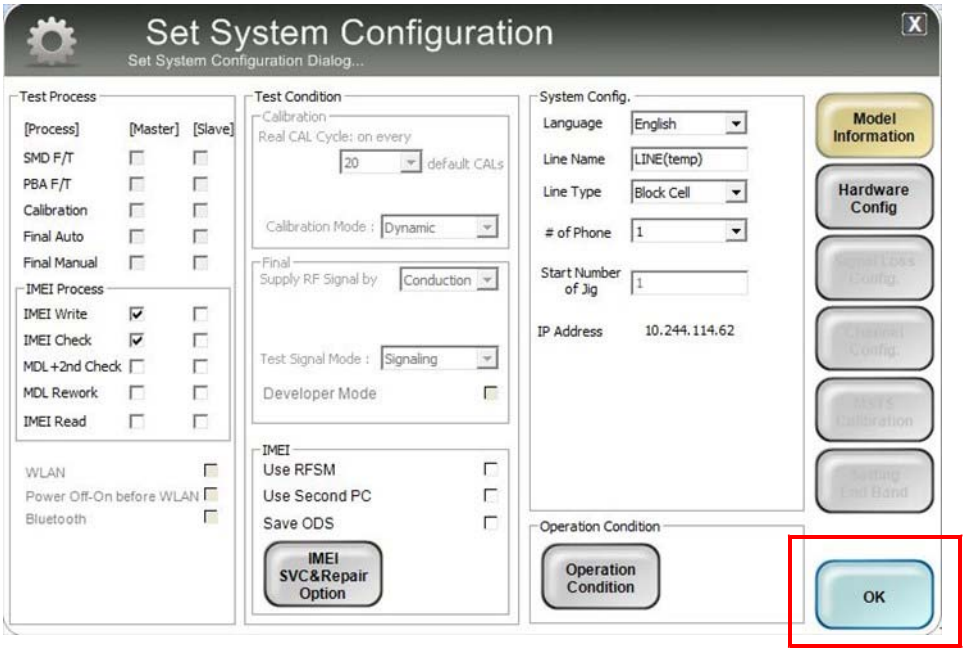

12. Click Model Info and OK when pop-up shows

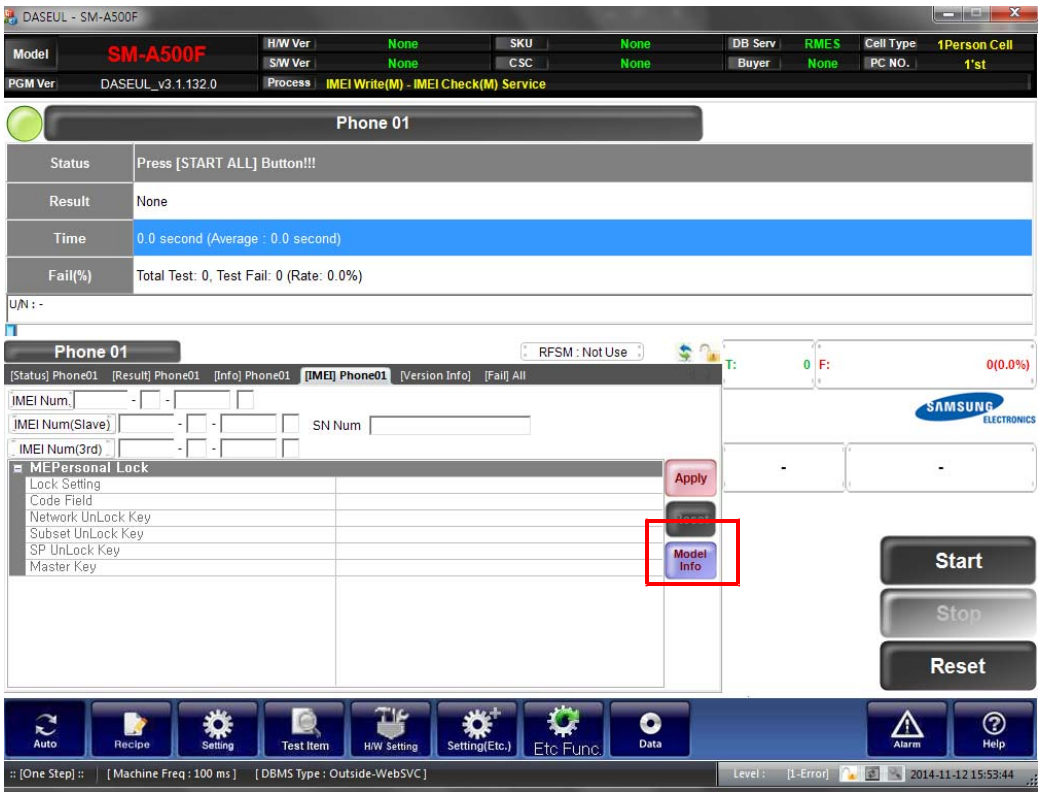

Confidential and proprietary-the contents in this service guide subject to change without prior notice.
Distribution, transmission, or infringement of any content or data from this document without Samsung's written authorization is strictly prohibited.

13. Click OK

14. Input SKU_CODE and BUYER, then click Save button.

※ Refer to HHPsvc→IMEI Review to check SKU Code and buyer

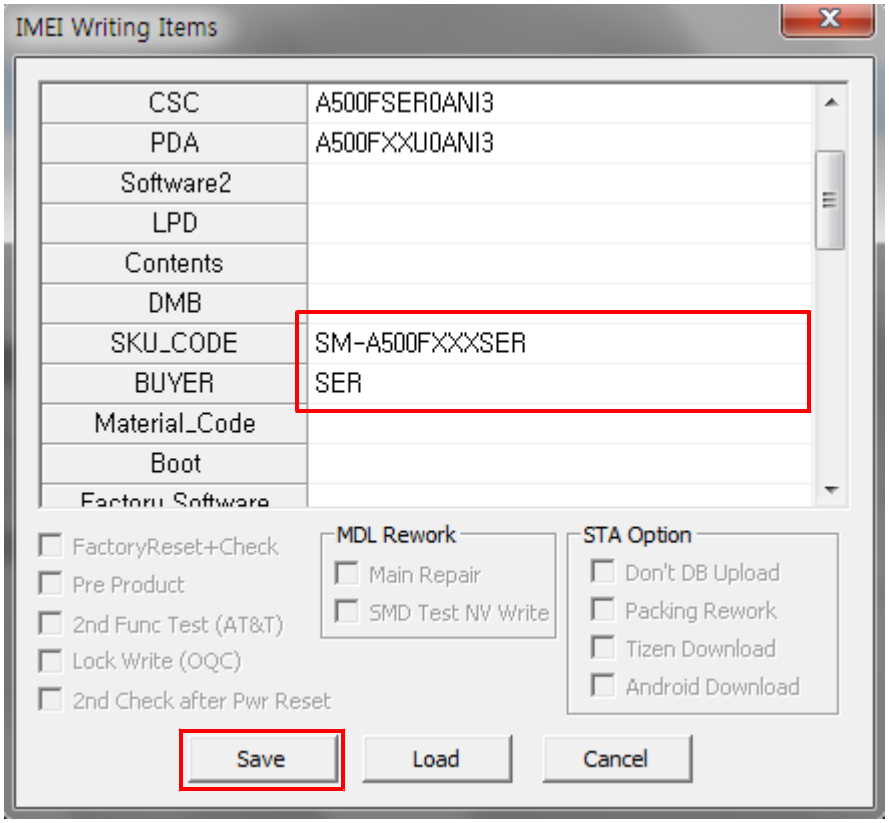

Confidential and proprietary-the contents in this service guide subject to change without prior notice.
Distribution, transmission, or infringement of any content or data from this document without Samsung's written authorization is strictly prohibited.

15. Input IMEI Number and click Apply

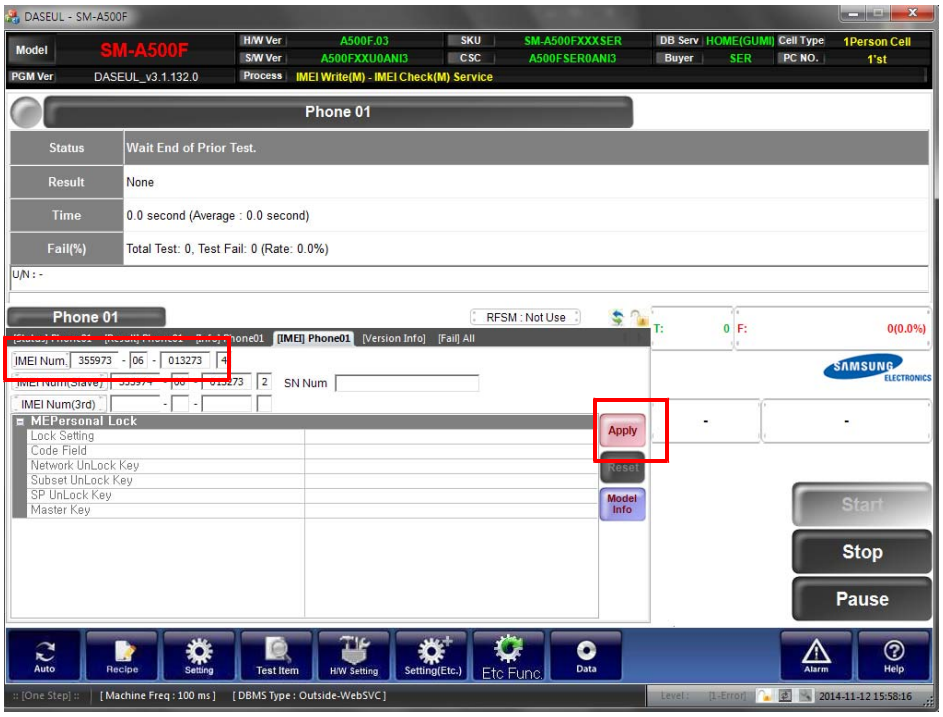

16. ① Click Start, and input IMEI writing ID and Password →②input Ticket No

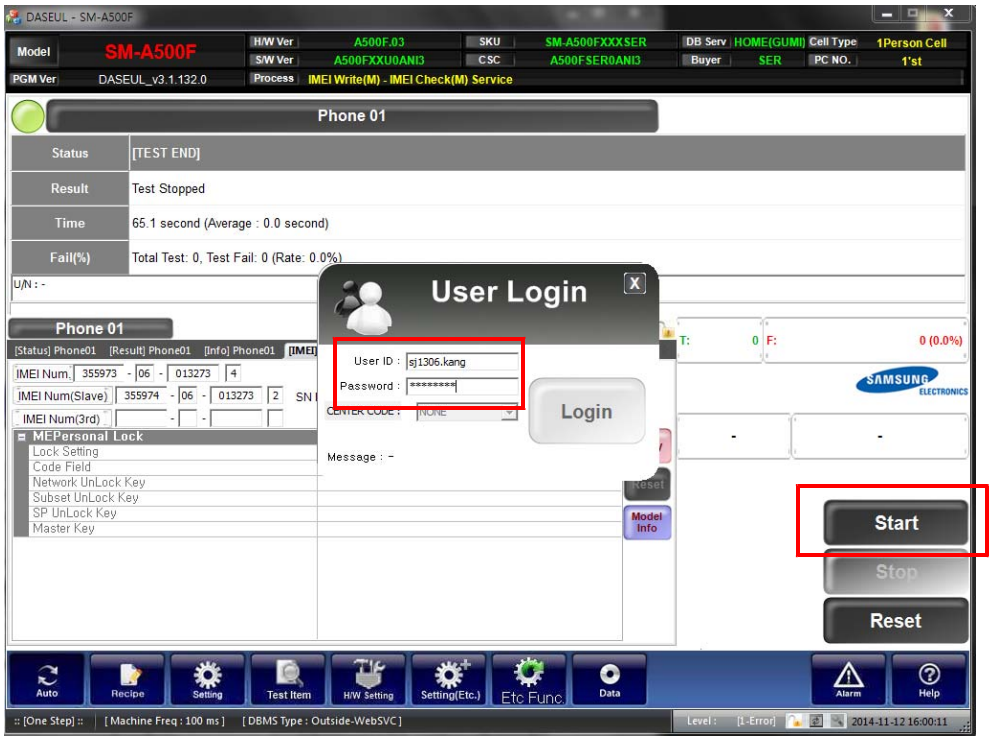

17. Connect the phone to Anyway JIG

Confidential and proprietary-the contents in this service guide subject to change without prior notice.
Distribution, transmission, or infringement of any content or data from this document without Samsung's written authorization is strictly prohibited.

※ When you connect the phone, the phone should be turned off.
After connecting the phone, the phone will be booted automatically.

18. IMEI Writing Proceeding

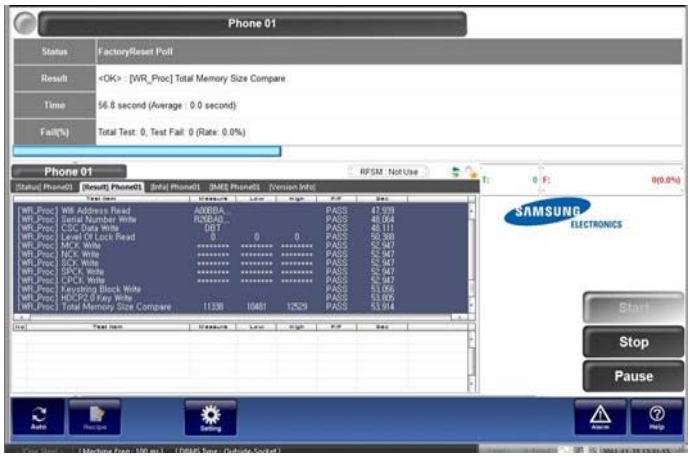

19. IMEI Writing Success

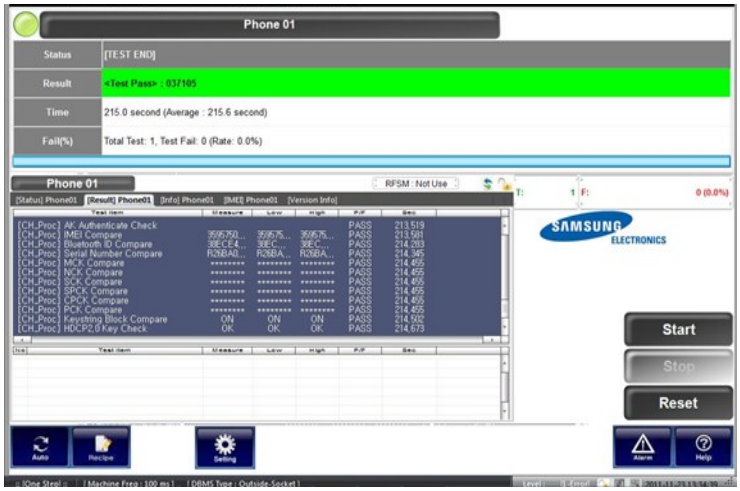

Confidential and proprietary-the contents in this service guide subject to change without prior notice.
Distribution, transmission, or infringement of any content or data from this document without Samsung's written authorization is strictly prohibited.

6-3. Boot Recovery

6-3-1. Symptom

- No Power on, Unable to enter download mode.

6-3-2. Coverage

- The device which get damaged for bootloader.

6-3-3. Required items in order to do Boot Recovery

- Downloader Program (**Odin3 v3.09.3.exe**)
- SM-A500F Mobile Phone(Normal device)
- Data Cable
- Micro SD Card (Higher than SDHC type and 4GB)
- Full S/W binary(pit, BL, AP, CP)
- Recovery pit file and bootloader
  - pit file: A5LTE_EUR_OPEN.pit
  - boot loader: normal bootloader(BL)

6-3-4. Brief process for Boot Recovery

1. Download recovery pit and bootloader to SD card by using normal device
2. Insert SD card to no power device and try to enter download mode.
3. Download full S/W to the defected device

Confidential and proprietary-the contents in this service guide subject to change without prior notice.
Distribution, transmission, or infringement of any content or data from this document without Samsung's written authorization is strictly prohibited.

6-3-5. Process of Boot Recovery

1. SW download

(1) Download full S/W(BL, AP, CP, CSC) to normal device.

2. Make SD card for Recovery

(1) Run Odin3 v3.09.3 exe

(2) Load "A5LTE_EUR_OPEN.pit" in PIT tap and "normal bootloader file" in BL tap.

(3) Check "T-Flash" option

(4) Insert SD card to normal device and enter to download mode.

(5) Connect the device to PC

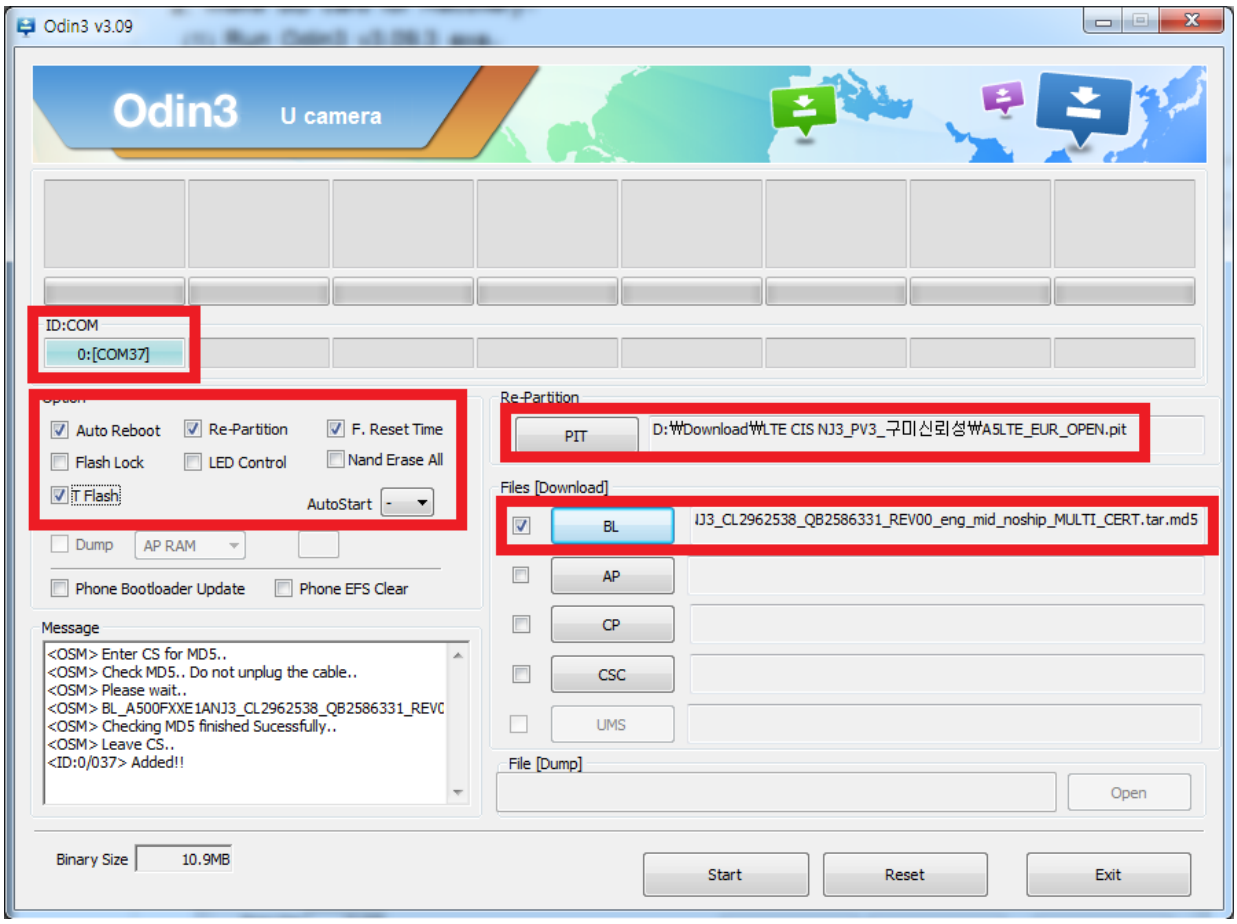

(6) Click "Start" button to download Recovery pit and bootloader files to SD card.

- If it is Pass, SD card has successfully made for boot recovery.
- If it is Fail, try to this with another SD card.(It would be defect of SD card)

Confidential and proprietary-the contents in this service guide subject to change without prior notice.
Distribution, transmission, or infringement of any content or data from this document without Samsung's written authorization is strictly prohibited.

3. Boot Recovery for damaged device

(1) Insert SD card to "No power" device

(2) Enter to download mode, using key combination(Volume down + Home + Power)

(3) If the device is successfully recovered, the device will enter download mode.

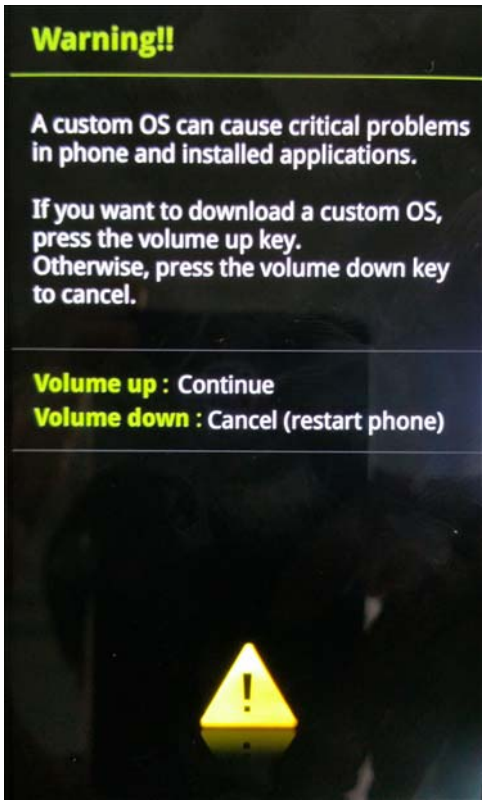

Volume up

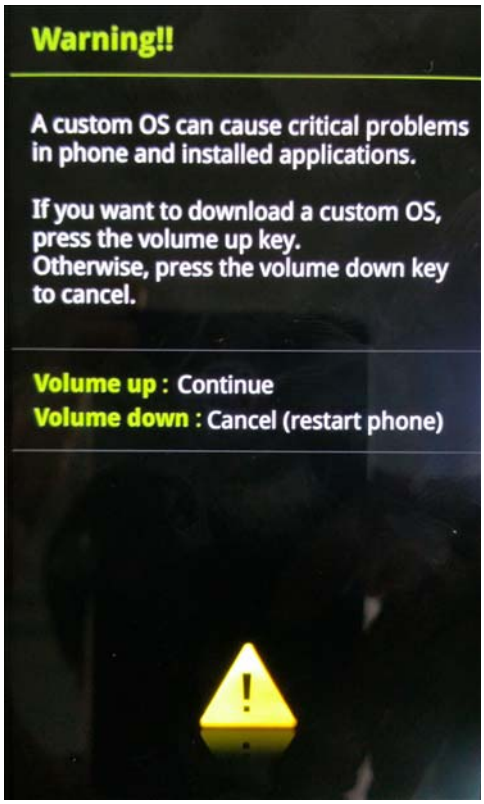

(4) After entering download mode, download full S/W to the device including BL(Bootloader), AP(Platform binary), CP(Modem binary) and CSC.

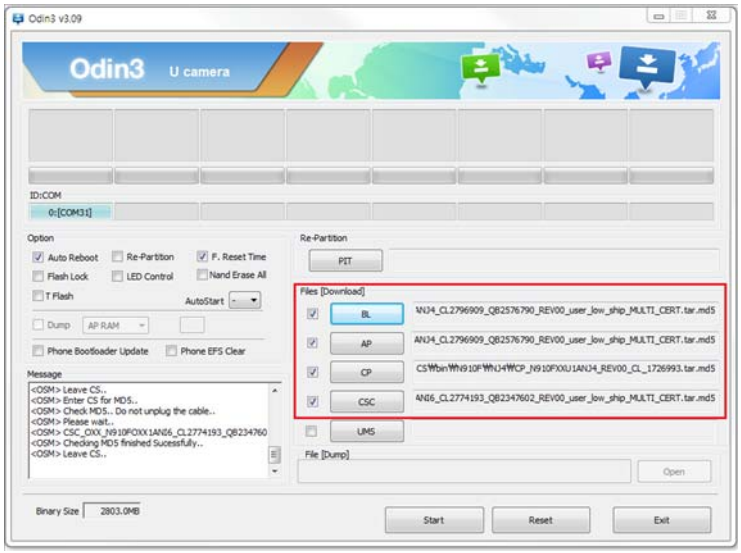

Confidential and proprietary-the contents in this service guide subject to change without prior notice.
Distribution, transmission, or infringement of any content or data from this document without Samsung's written authorization is strictly prohibited.

6-4. RF Calibration

6-1-1. Required items in order to calibrate RF

- Installation program: RF Calibration Program
  - Daseul_Launcher_vx.x.xx.exe
  - Daseul_CAL_ALL_Runtime_x.x.xxx.x.CAB
  - Model File (SM-A500F_OPEN_CALIBRATION_VER_x.x.xxx.xx.CAB)

※ It is required to use the latest program.

- SM-A500 Mobile Phone
- E3632A Power Supply
- JIG BOX (GH81-11888A)
- Adapter (GH81-11888K)
- 1.6T RF Cable (GH81-11456A, 1ea)
- R&S CMW500
- GPIB Cable (2ea)
- IF Cable (GH81-10631A)
- UART Serial Cable

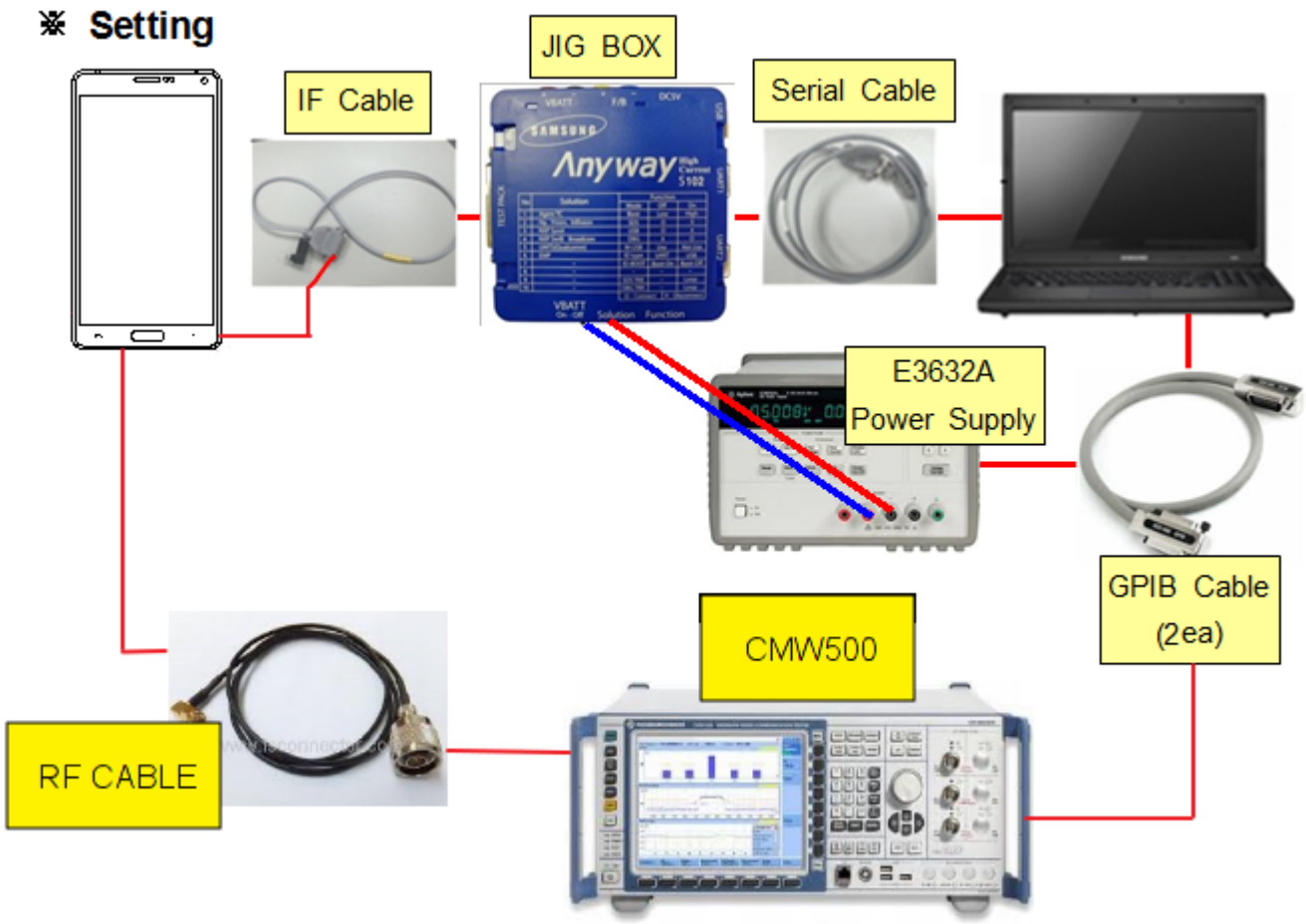

Confidential and proprietary-the contents in this service guide subject to change without prior notice.
Distribution, transmission, or infringement of any content or data from this document without Samsung's written authorization is strictly prohibited.

- Table of test cables

IF Cable	GH81-10631A	GH81-10952A	GH81-11171A	
	11 pin	7 pin (New)	7 pin (Old)	
RF Cable	GH81-11962D	GH81-11962G	GH81-11962C	GH81-11456A
	1.35T, Short	1.35T, Long	1.6T, Short	1.6T, Long
4 Port Divider	GH81-11962A			
	Use / No use			

6-1-2. RF Calibration Program

1. Run the RF Calibration Program Launcher, 'DASEUL_Launcher_vx.x.xx.exe'.

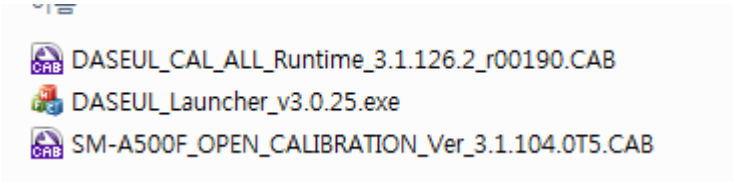

2. Check the 'Calibration' menu, and select 'Extract & Run'.

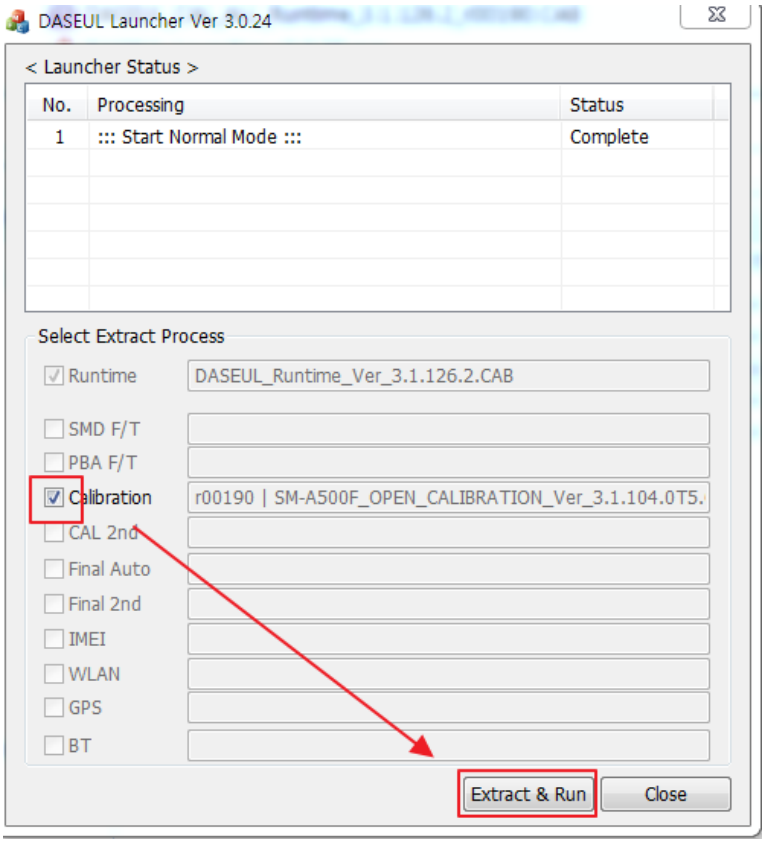

Confidential and proprietary-the contents in this service guide subject to change without prior notice.
Distribution, transmission, or infringement of any content or data from this document without Samsung's written authorization is strictly prohibited.

3. Check the 'CAL' and open the model file, then select 'Start' button.

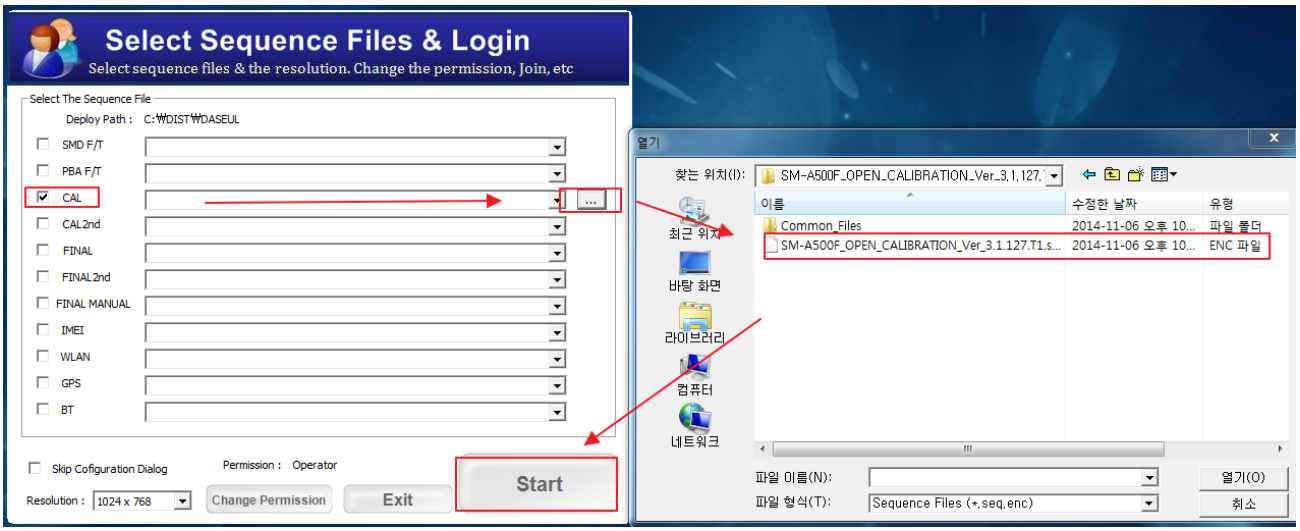

Confidential and proprietary-the contents in this service guide subject to change without prior notice.
Distribution, transmission, or infringement of any content or data from this document without Samsung's written authorization is strictly prohibited.

4. Change the Line Type to 'Block Cell' and disable 'Smart Cloud Cell'.

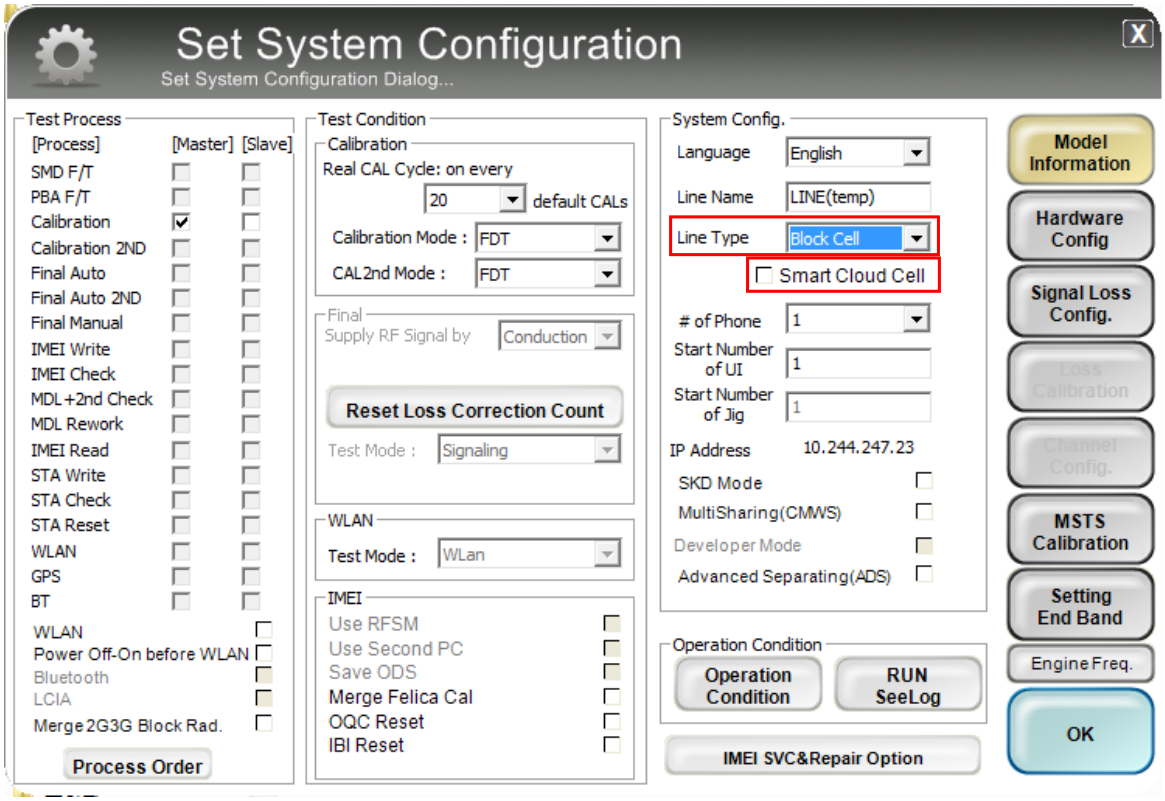

Confidential and proprietary-the contents in this service guide subject to change without prior notice.
Distribution, transmission, or infringement of any content or data from this document without Samsung's written authorization is strictly prohibited.

5. Set the GPIB address of MSTS(CMW500) and Power Supply(E3632A) to enter 'Hardware Config' and 'Save'. (Check the GPIB address of equipments in advance)

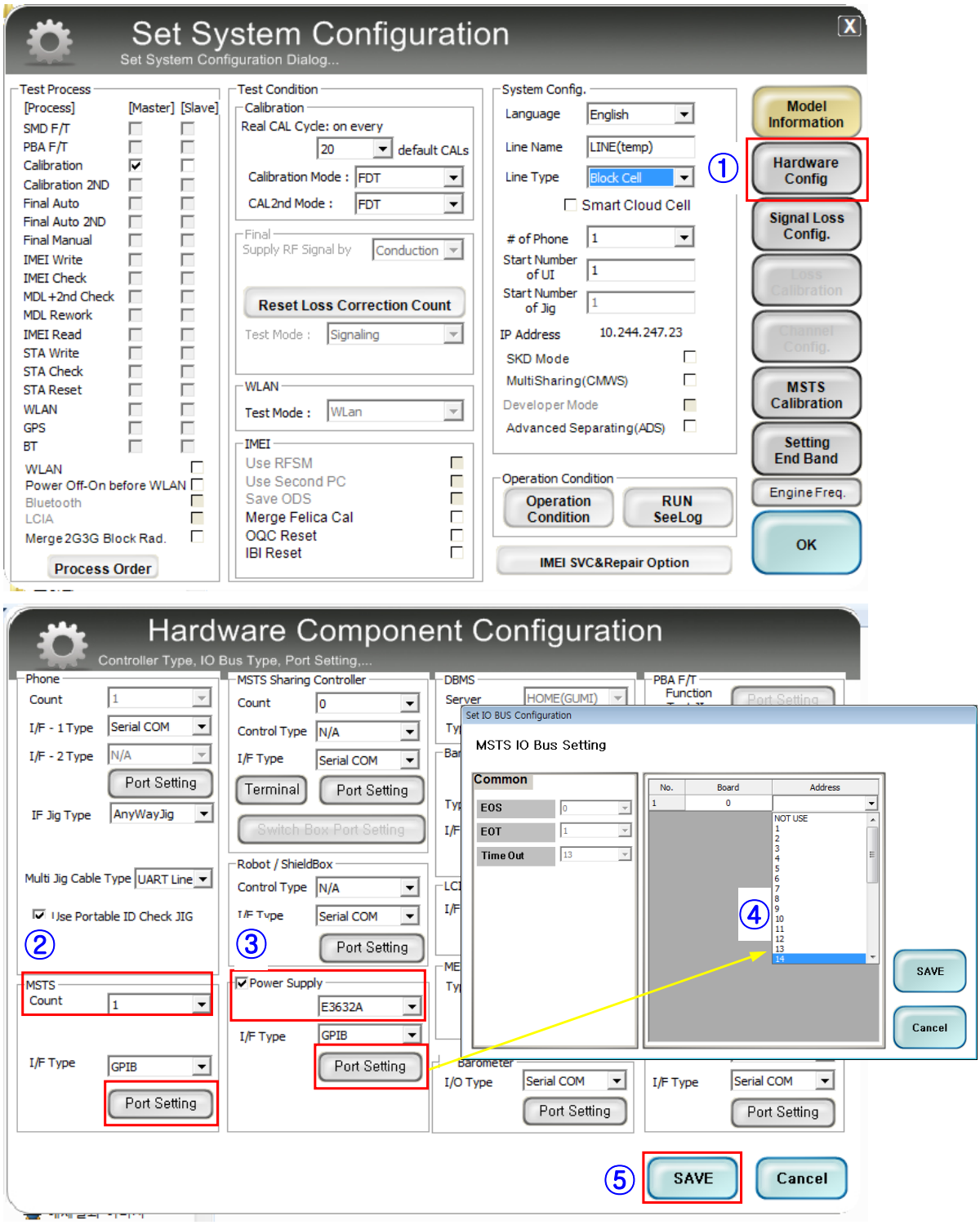

Confidential and proprietary-the contents in this service guide subject to change without prior notice.
Distribution, transmission, or infringement of any content or data from this document without Samsung's written authorization is strictly prohibited.

6. Press 'OK' to start RF Calibration after completing all settings.

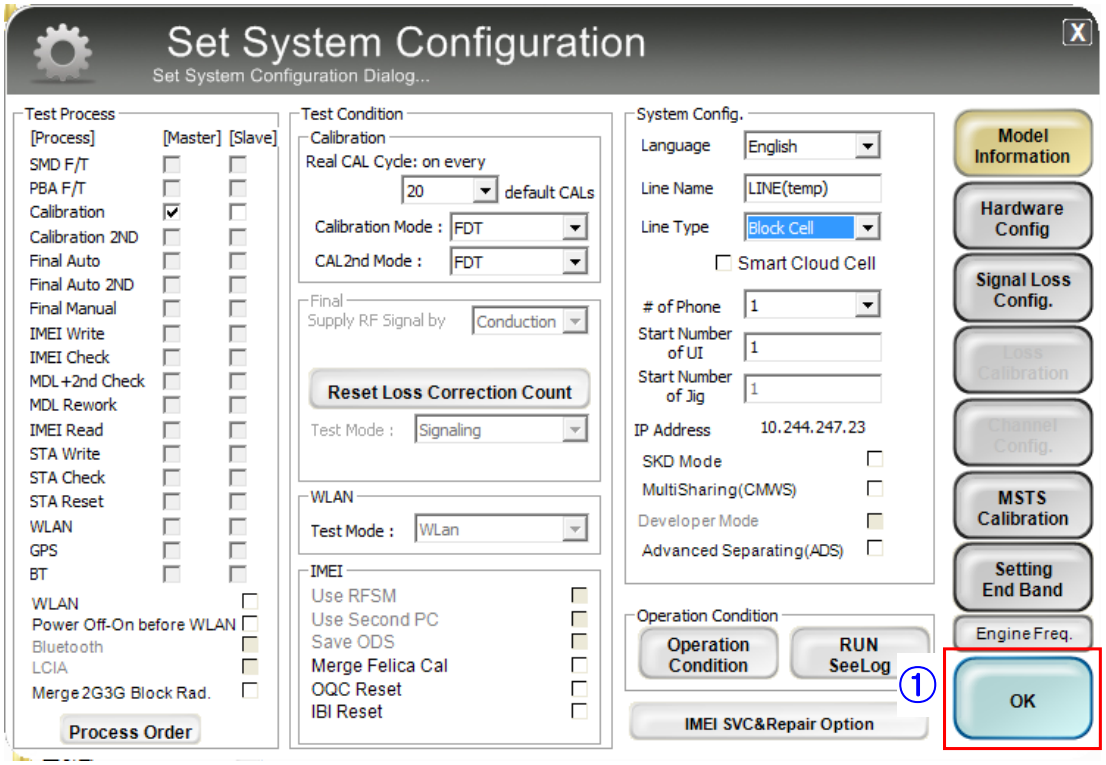

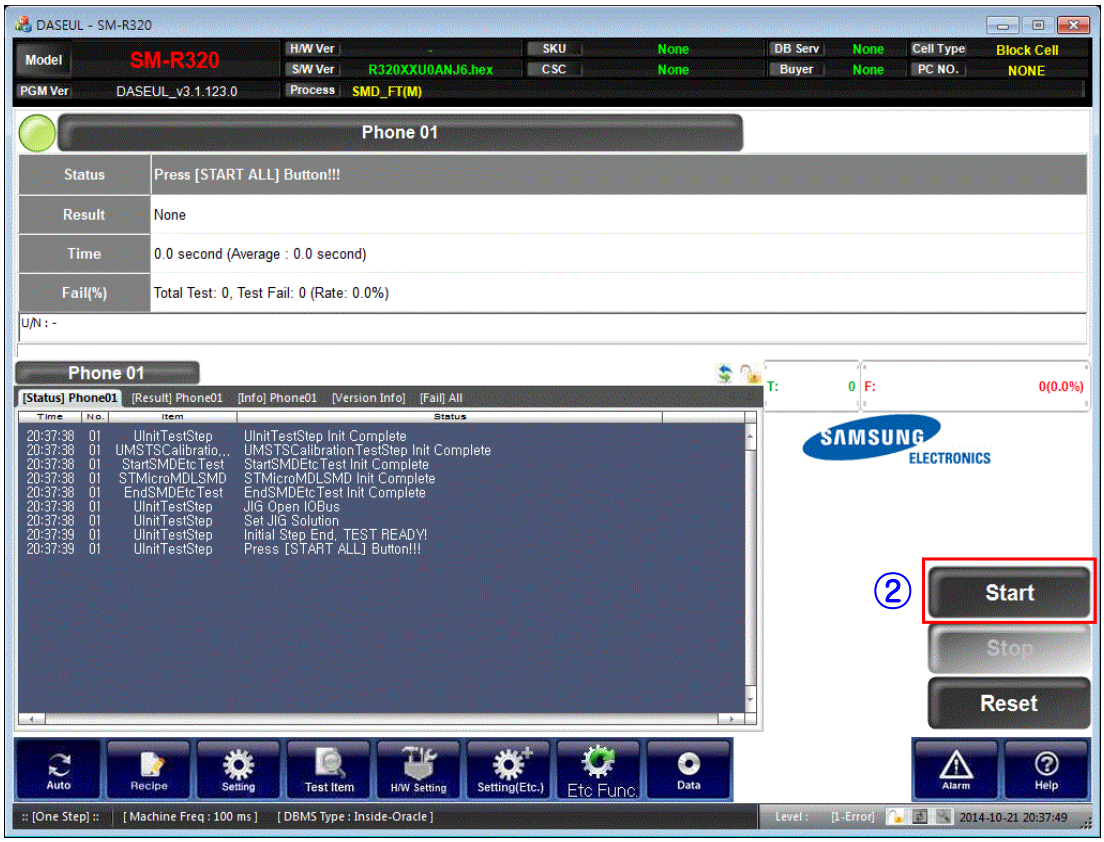

Confidential and proprietary-the contents in this service guide subject to change without prior notice.
Distribution, transmission, or infringement of any content or data from this document without Samsung's written authorization is strictly prohibited.

7. Level 2 Repair

7-1. Pre-requisite

Tweezers / Disass'y Stick / Screw Driver	**Anti-statoc Gloves**
OCTA Disassembly Holder	**Anti-static Mat**
Acryl Jig Rework Form	**Glass Absorbers (2ea)**
Tape Rework Form	**Mobile Dryer**

Confidential and proprietary-the contents in this service guide subject to change without prior notice.
Distribution, transmission, or infringement of any content or data from this document without Samsung's written authorization is strictly prohibited.

7-2. Parts which must be changed after repair

OCTA Form Tape	
Bracket Cu Tape	
Touch Key Top Tape	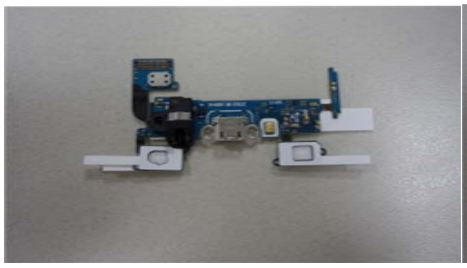 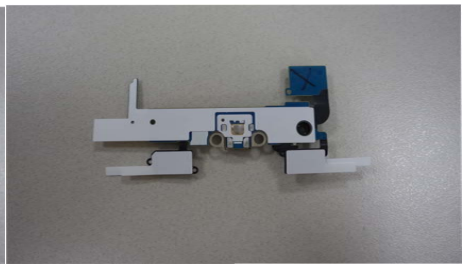

Confidential and proprietary-the contents in this service guide subject to change without prior notice.
Distribution, transmission, or infringement of any content or data from this document without Samsung's written authorization is strictly prohibited.

7-3. Disassembly

1 **Temperature : 70± 10 °C**	2
1) After heating for 10 minutes the decice at 70~80℃, take out the device from Mobile dryer.	1) Detach the Bracket CU tape care fully from the OCTA Cu sheet using Glass absorber and holder. 2) Be careful not to separate LCD from TSP.
3 	4
1) Disassemble loosen 12 Point of Bracket	1) Disassemble Bracket and REAR

Confidential and proprietary-the contents in this service guide subject to change without prior notice.
Distribution, transmission, or infringement of any content or data from this document without Samsung's written authorization is strictly prohibited.

5 	6
1) Detach the Bracket and REAR	1) Loosen a Screw in PBA Ass'y
7 	8
1) Detach Connector and Coaxial Cable from PBA	1) Detach the PBA from bottom REAR 2) Be careful not to damage

Confidential and proprietary-the contents in this service guide subject to change without prior notice.
Distribution, transmission, or infringement of any content or data from this document without Samsung's written authorization is strictly prohibited.

9 	10
1) Detach Main and Sub Camera on PBA	1) Detach the Receiver, Speaker, Coaxial Cable and Battery
11 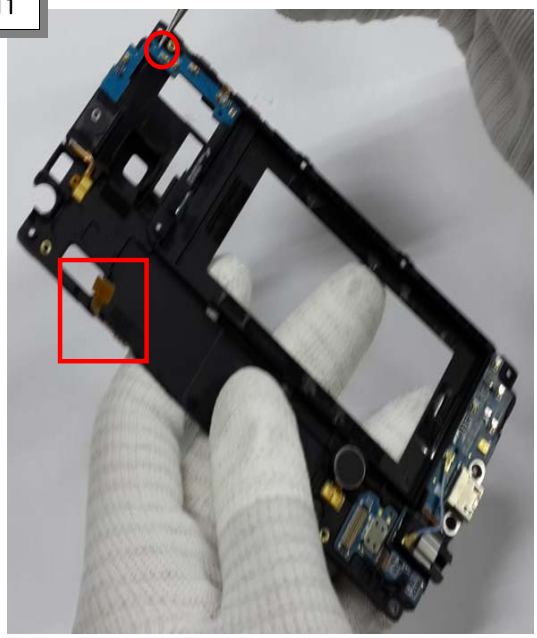	12
1) Detach upper Sub PBA and Power key 2) Be careful not to Damage	1) Detach lower Sub PBA from Bracket 2) Be careful not to Damage

Confidential and proprietary-the contents in this service guide subject to change without prior notice.
Distribution, transmission, or infringement of any content or data from this document without Samsung's written authorization is strictly prohibited.

7-4. Assembly

1 	2
1) Assemble lower Sub PBA on Bracket	1) Assemble the Upper/Lower SUB PBA and Coaxial Cable Then RCV, Speaker, Power Key
3 	4
1) Attach Battery on Bracket 2) Press Battery using Battery Pressing JIG.	1) Attach Main and Sub Camera on PBA

Confidential and proprietary-the contents in this service guide subject to change without prior notice.
Distribution, transmission, or infringement of any content or data from this document without Samsung's written authorization is strictly prohibited.

5 	6
1) Assemble PBA on Bracket 2) Assemble lower Sub PBA and Main PBA	1) Assemble Connector on the PBA Assy 2) Assemble Coaxial Cable
7 	8
1) Tighten a screw 1.2 ± 0.1 Kgf/㎠	1) Assemble PBA ass'y and REAR

Confidential and proprietary-the contents in this service guide subject to change without prior notice.
Distribution, transmission, or infringement of any content or data from this document without Samsung's written authorization is strictly prohibited.

5 	6
1) Tighten screw the 12 point 1.2 ± 0.1 Kgf/㎠	1) Assemble LCD Connector 2) Attach LCD and REAR ass'y
7 	
1) Press OCTA Window using Window pressing JIG.	

Confidential and proprietary-the contents in this service guide subject to change without prior notice.
Distribution, transmission, or infringement of any content or data from this document without Samsung's written authorization is strictly prohibited.

8. Level 3 Repair

9-1. Battery Replacement

→ Whenever the battery should be changed from broken one to new one, "Battery accumulation usage-amount initialization" should be done like below.

9-1-1. Required items in order to repair battery

- SM-A500F/G/H Mobile Phone
- SM-A500F/G/H Battery
- PC
- JIG BOX (GH81-11888A)
- JIG Cable (GH81-10952A)
- Serial Cable

※ Settings

Connect ANYWAY JIG
with JIG CABLE (Phone to JIG)
and PC to Anyway JIG Using Serial cable

Confidential and proprietary-the contents in this service guide subject to change without prior notice.
Distribution, transmission, or infringement of any content or data from this document without Samsung's written authorization is strictly prohibited.

9-1-2. Battery replacement procedure.

- To Be Determined soon.

Confidential and proprietary-the contents in this service guide subject to change without prior notice.
Distribution, transmission, or infringement of any content or data from this document without Samsung's written authorization is strictly prohibited.

9-1. Speaker module Replacement

→ Whenever speaker module should be changed from broken one to new one, "SPK calibration" should be done like below.

9-1-1. Required items in order to repair speaker module

- SM-A500F/G/H Mobile Phone
- SM-A500F/G/H Speaker module
- PC
- Earphone
- JIG BOX (GH81-11888A)
- JIG Cable (GH81-10952A)
- Serial Cable

Connect ANYWAY JIG
with JIG CABLE (Phone to JIG)
and PC to Anyway JIG Using Serial cable

Confidential and proprietary-the contents in this service guide subject to change without prior notice.
Distribution, transmission, or infringement of any content or data from this document without Samsung's written authorization is strictly prohibited.

9-1-2. Speaker module replacement procedure.

- To Be Determined soon.

Confidential and proprietary-the contents in this service guide subject to change without prior notice.
Distribution, transmission, or infringement of any content or data from this document without Samsung's written authorization is strictly prohibited.

8-1. Block Diagram

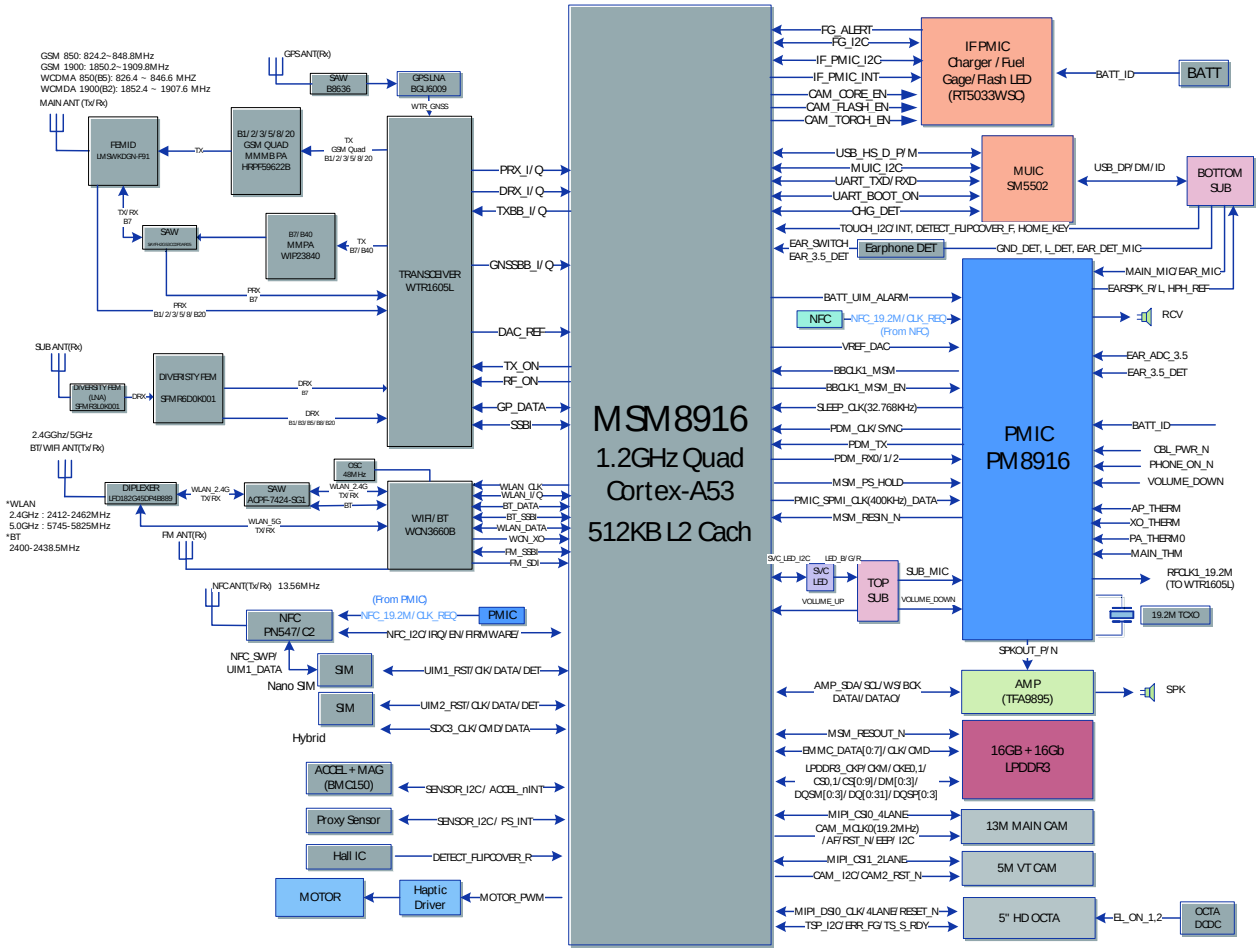

Confidential and proprietary-the contents in this service guide subject to change without prior notice.
Distribution, transmission, or infringement of any content or data from this document without Samsung's written authorization is strictly prohibited.

8-2. PCB Diagrams

8-2-1. Main PCB Top

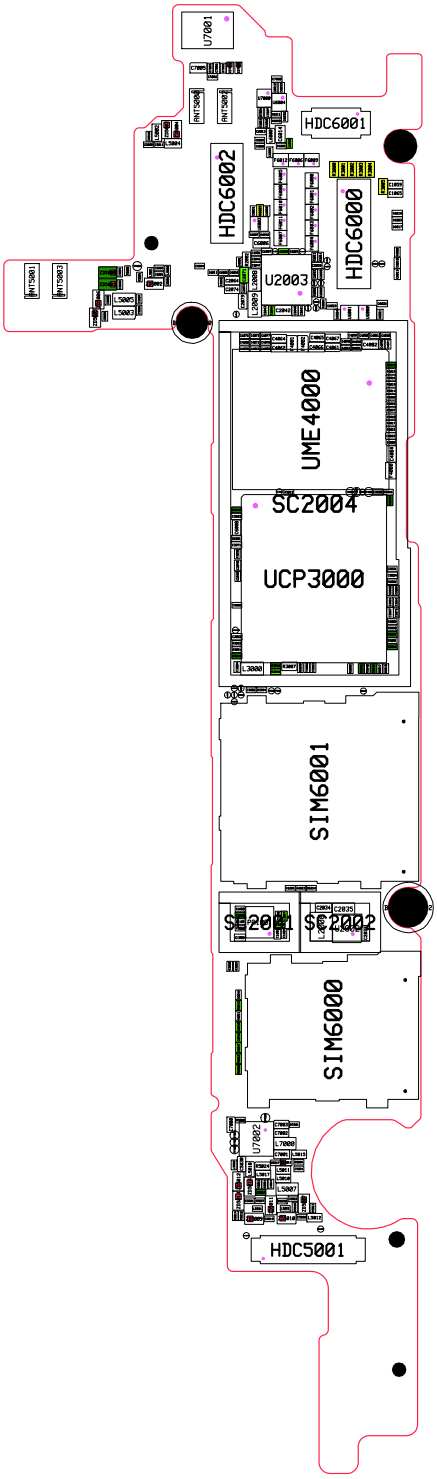

Confidential and proprietary-the contents in this service guide subject to change without prior notice.
Distribution, transmission, or infringement of any content or data from this document without Samsung's written authorization is strictly prohibited.

8-2-2. Bottom

Confidential and proprietary-the contents in this service guide subject to change without prior notice.
Distribution, transmission, or infringement of any content or data from this document without Samsung's written authorization is strictly prohibited.

8-2-3. Equipments

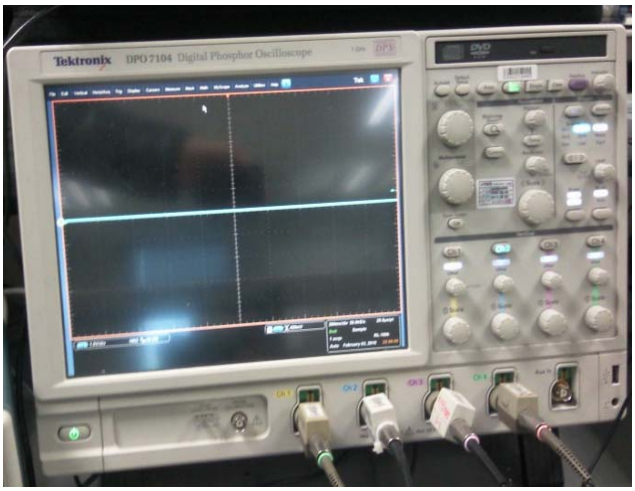

↑ Oscilloscope

↑ Digital Multimeter

↑ Power Supply

↑ + driver, ESD Safe Tweezer

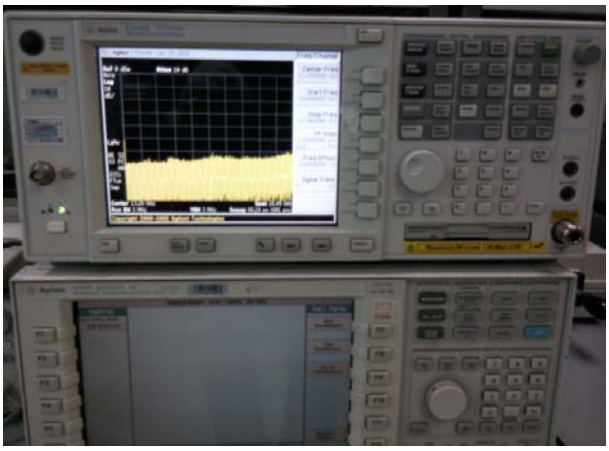

↑ 8960 & Spectrum Analyzer

↑ Soldering iron

Confidential and proprietary-the contents in this service guide subject to change without prior notice.
Distribution, transmission, or infringement of any content or data from this document without Samsung's written authorization is strictly prohibited.

8-3. Flow Chart of Troubleshooting

8-3-1. Power On

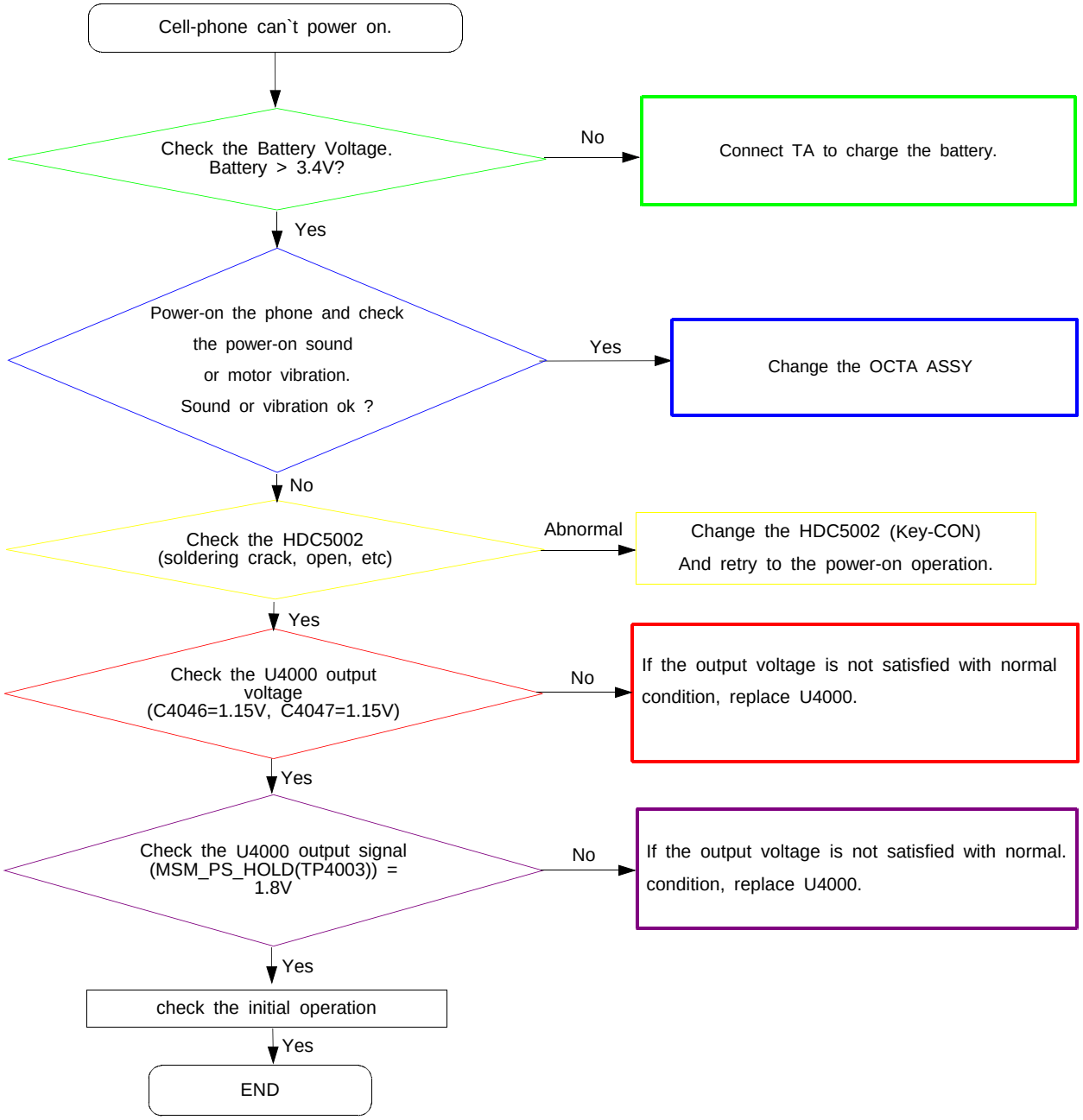

Confidential and proprietary-the contents in this service guide subject to change without prior notice.
Distribution, transmission, or infringement of any content or data from this document without Samsung's written authorization is strictly prohibited.

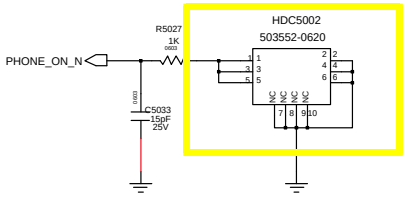

PWR On

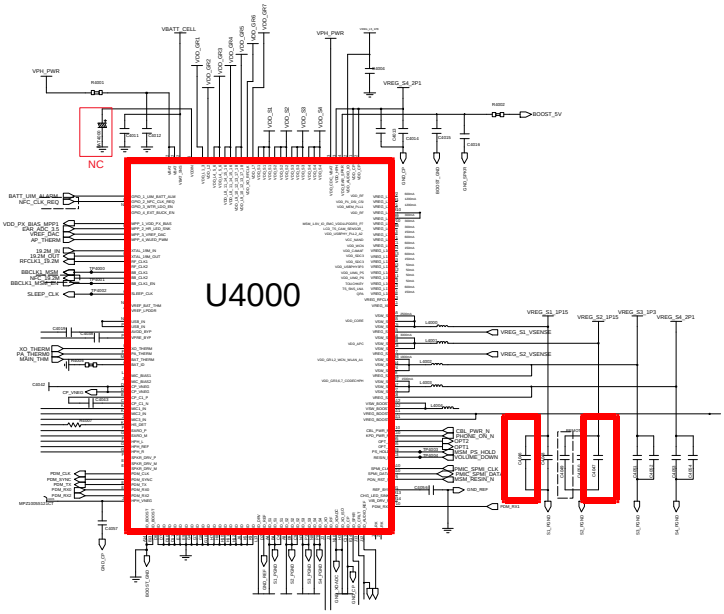

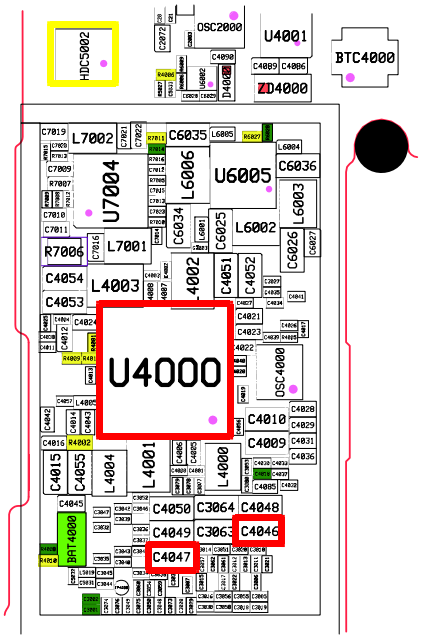

Confidential and proprietary-the contents in this service guide subject to change without prior notice.
Distribution, transmission, or infringement of any content or data from this document without Samsung's written authorization is strictly prohibited.

8-3-2. Initial

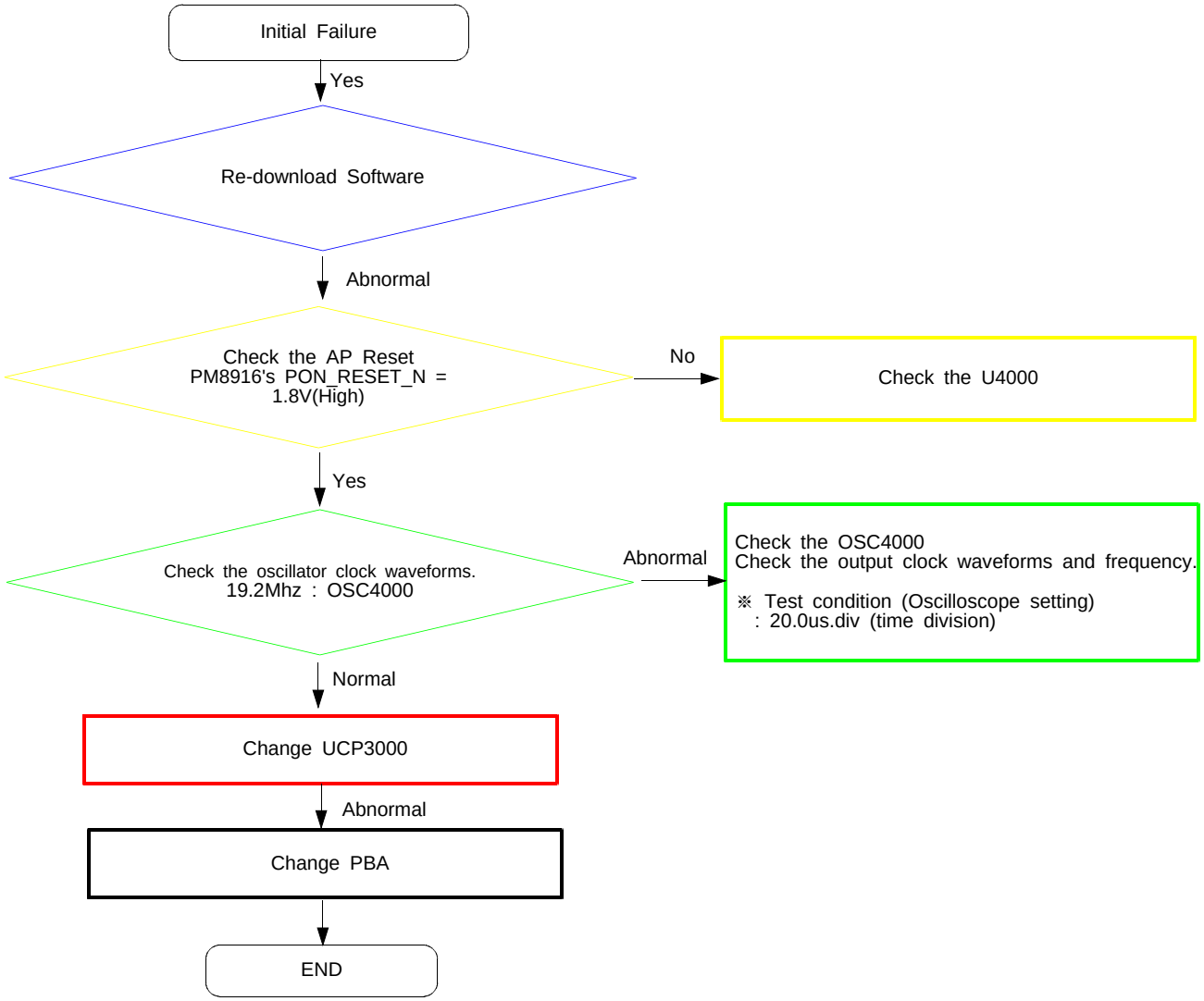

Confidential and proprietary-the contents in this service guide subject to change without prior notice.
Distribution, transmission, or infringement of any content or data from this document without Samsung's written authorization is strictly prohibited.

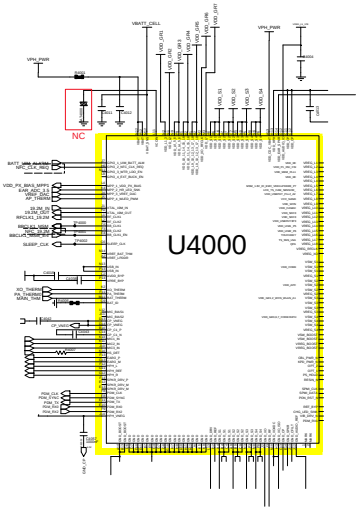

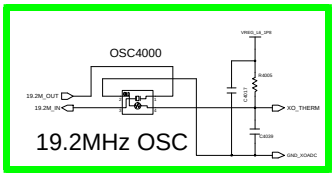

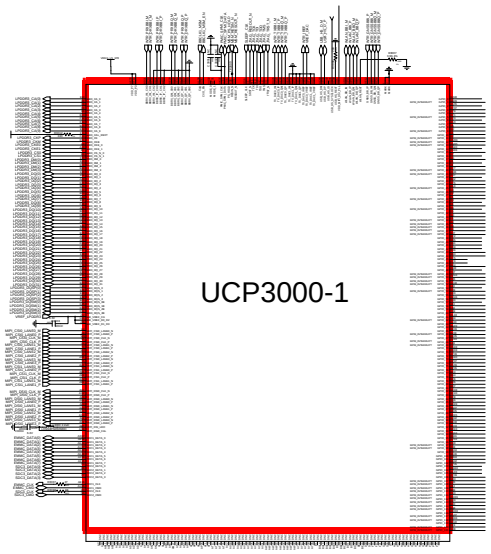

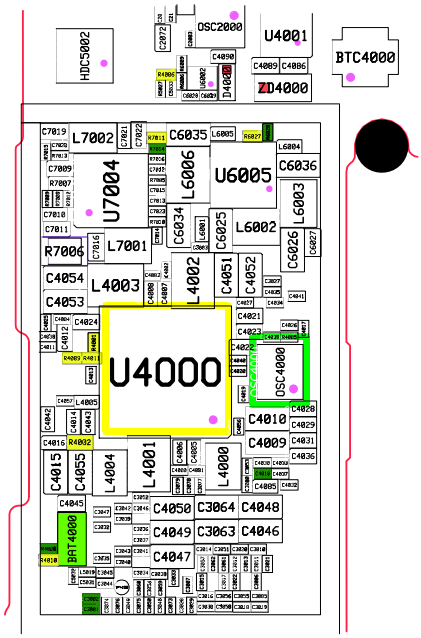

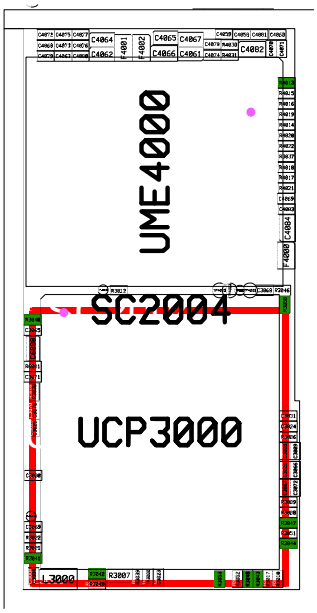

Confidential and proprietary-the contents in this service guide subject to change without prior notice.
Distribution, transmission, or infringement of any content or data from this document without Samsung's written authorization is strictly prohibited.

8-3-3. No Service

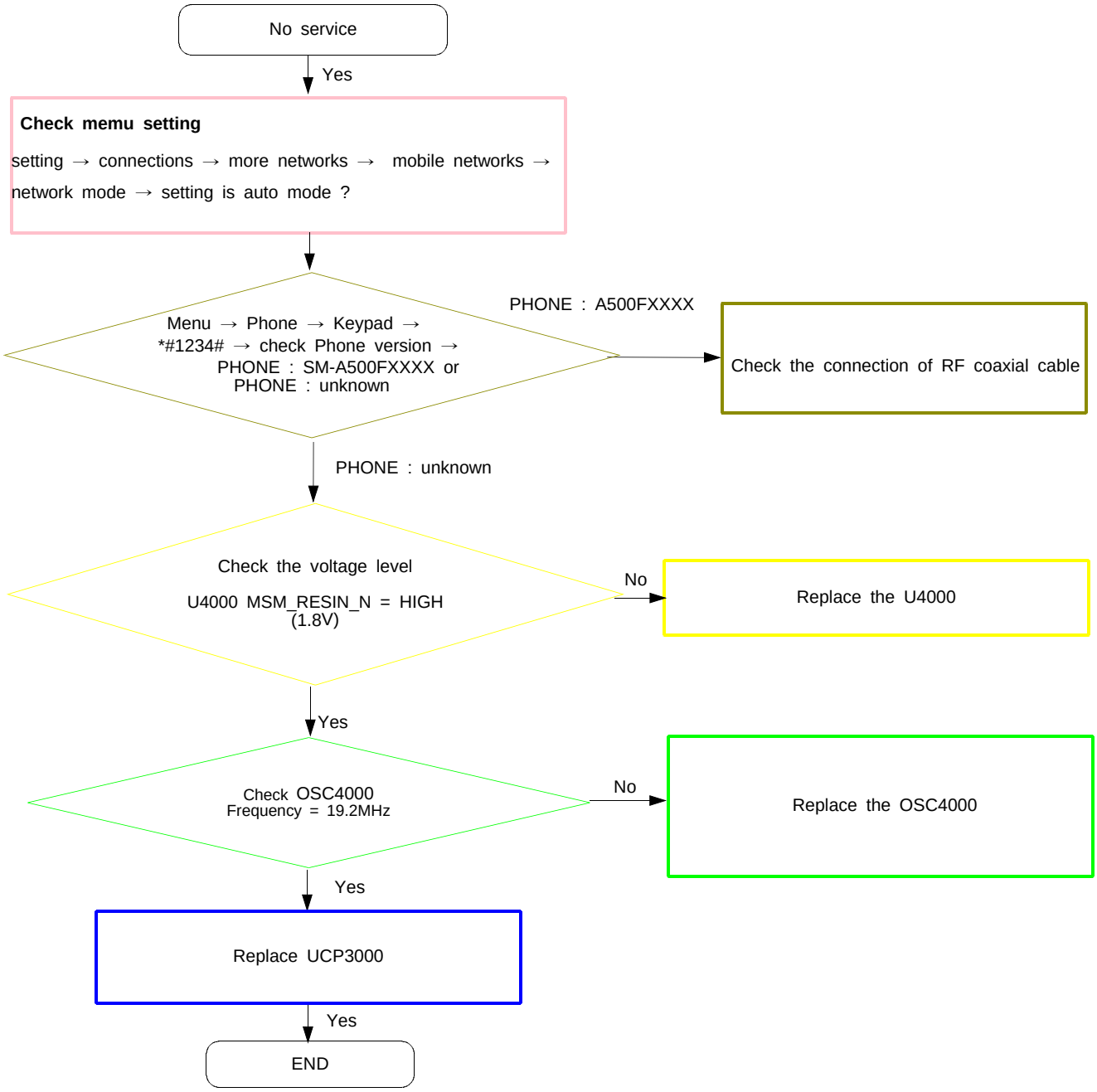

Confidential and proprietary-the contents in this service guide subject to change without prior notice.
Distribution, transmission, or infringement of any content or data from this document without Samsung's written authorization is strictly prohibited.

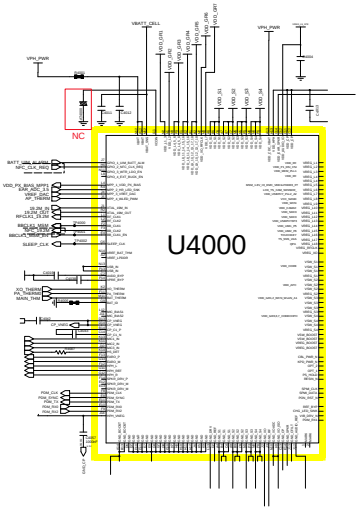

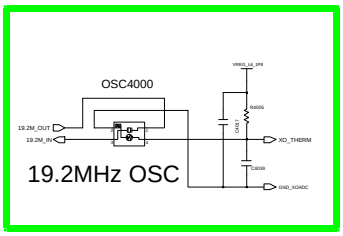

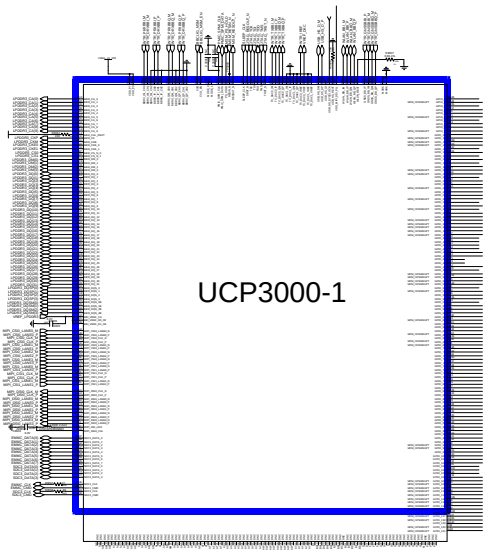

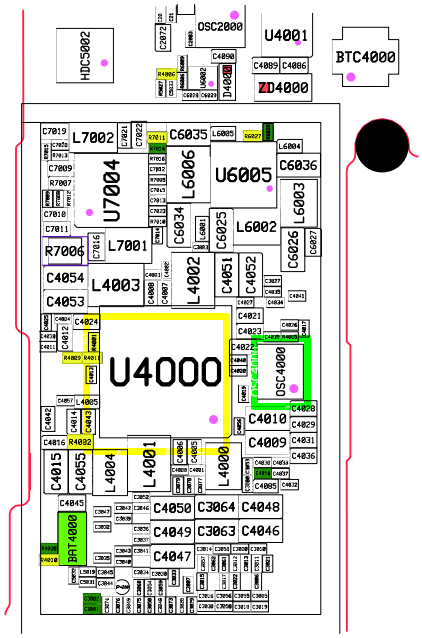

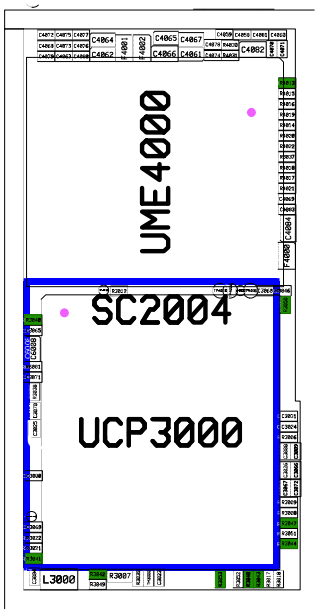

Confidential and proprietary-the contents in this service guide subject to change without prior notice.
Distribution, transmission, or infringement of any content or data from this document without Samsung's written authorization is strictly prohibited.

8-3-4. SIM Part

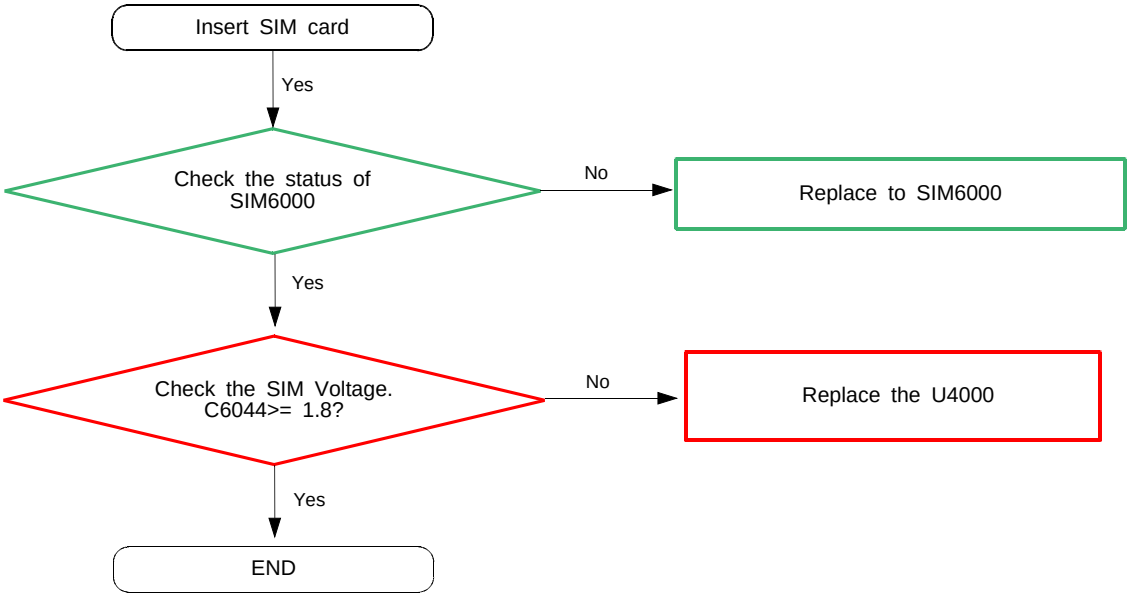

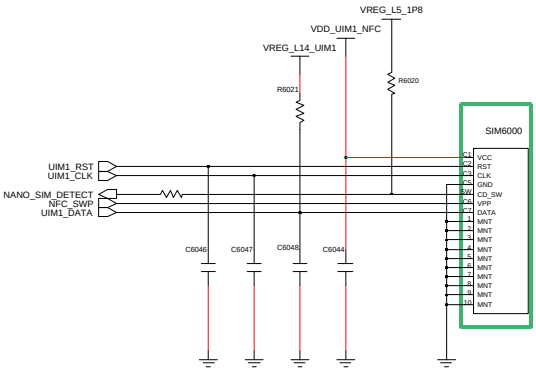

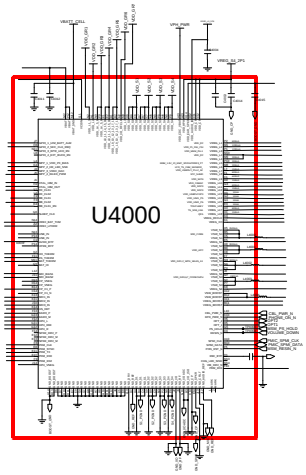

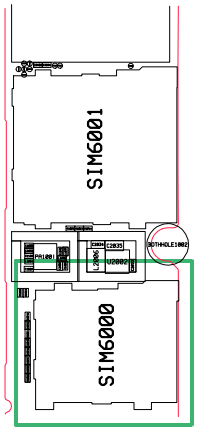

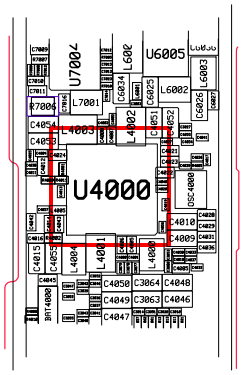

Confidential and proprietary-the contents in this service guide subject to change without prior notice.
Distribution, transmission, or infringement of any content or data from this document without Samsung's written authorization is strictly prohibited.

8-3-5. Micro SD Socket Part

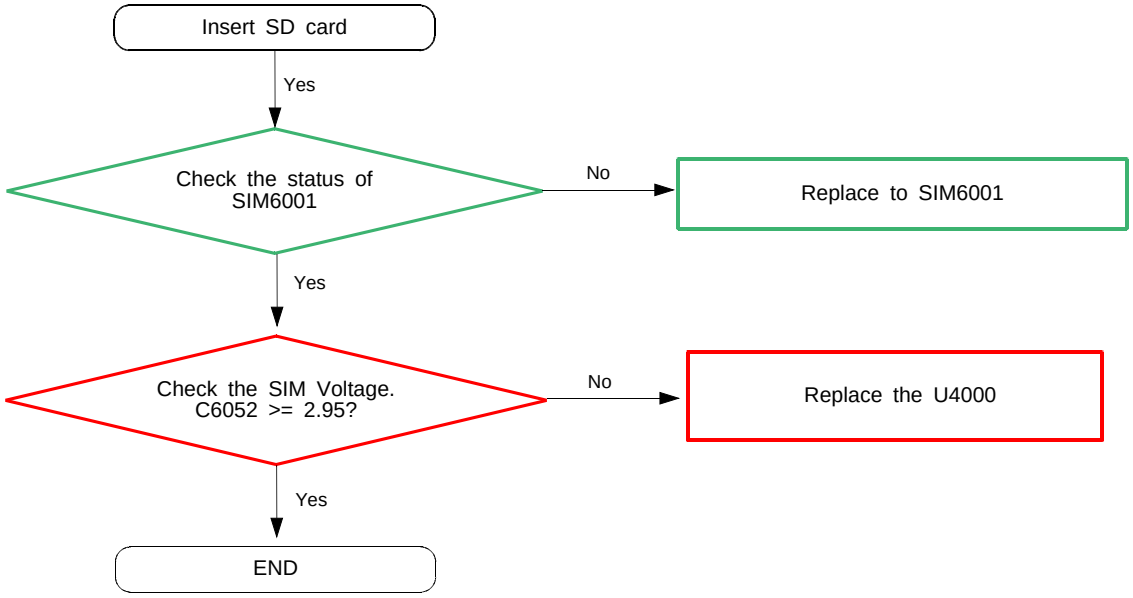

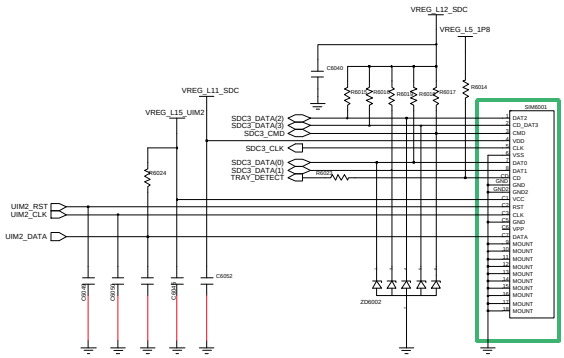

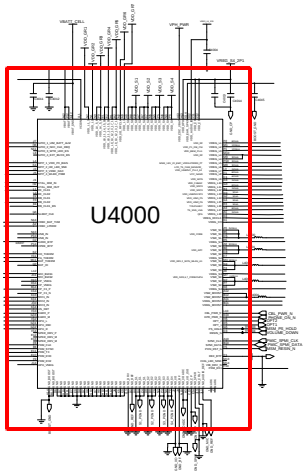

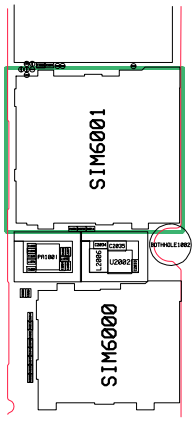

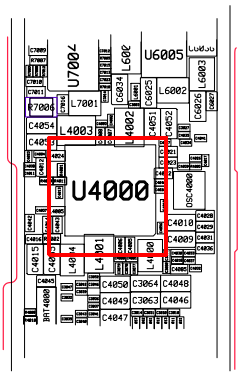

Confidential and proprietary-the contents in this service guide subject to change without prior notice.
Distribution, transmission, or infringement of any content or data from this document without Samsung's written authorization is strictly prohibited.

8-3-6. Charging Part

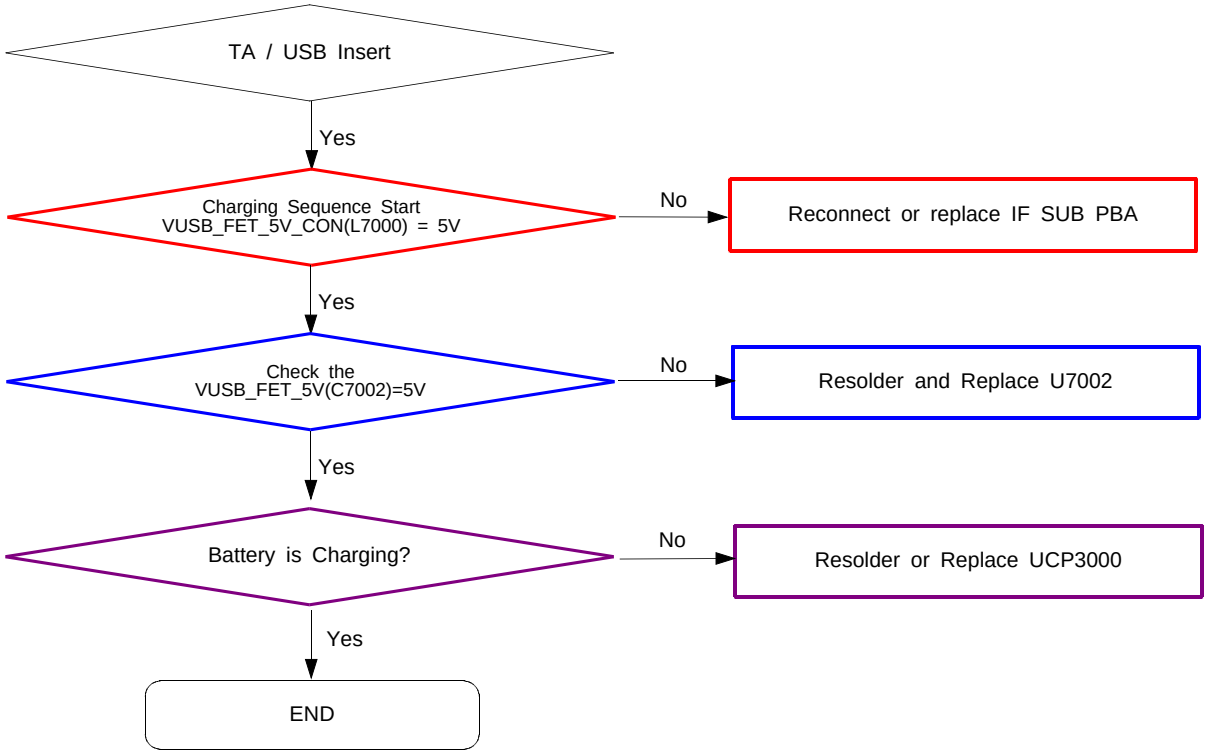

Confidential and proprietary-the contents in this service guide subject to change without prior notice.
Distribution, transmission, or infringement of any content or data from this document without Samsung's written authorization is strictly prohibited.

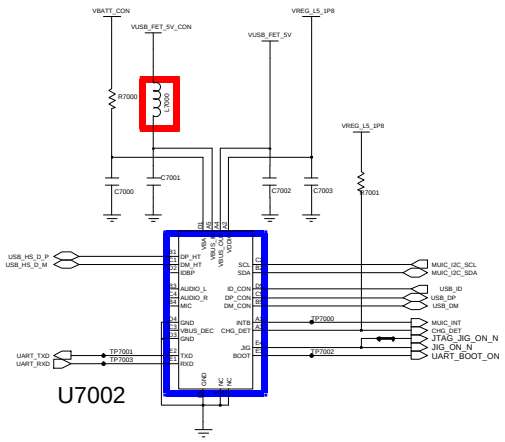

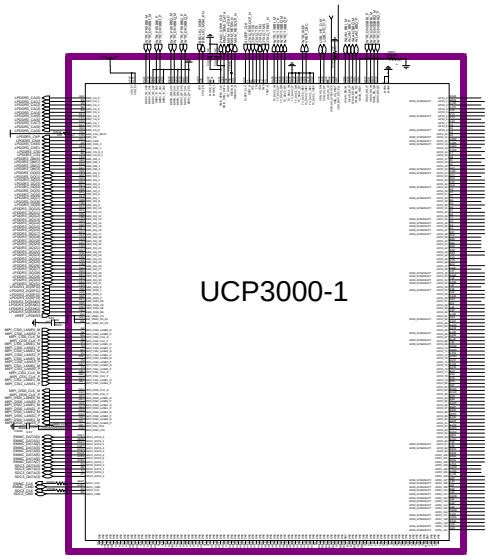

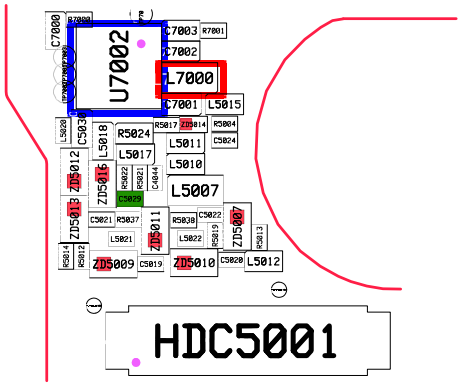

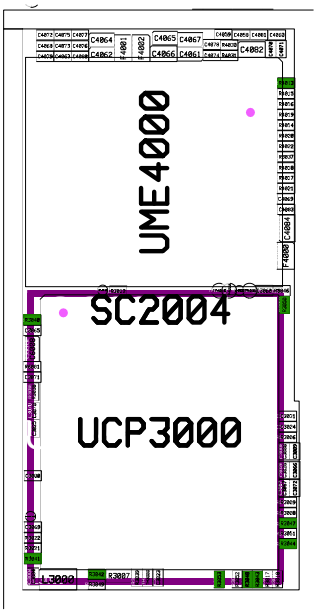

Confidential and proprietary-the contents in this service guide subject to change without prior notice.
Distribution, transmission, or infringement of any content or data from this document without Samsung's written authorization is strictly prohibited.

8-3-7. 6Axics Sensor

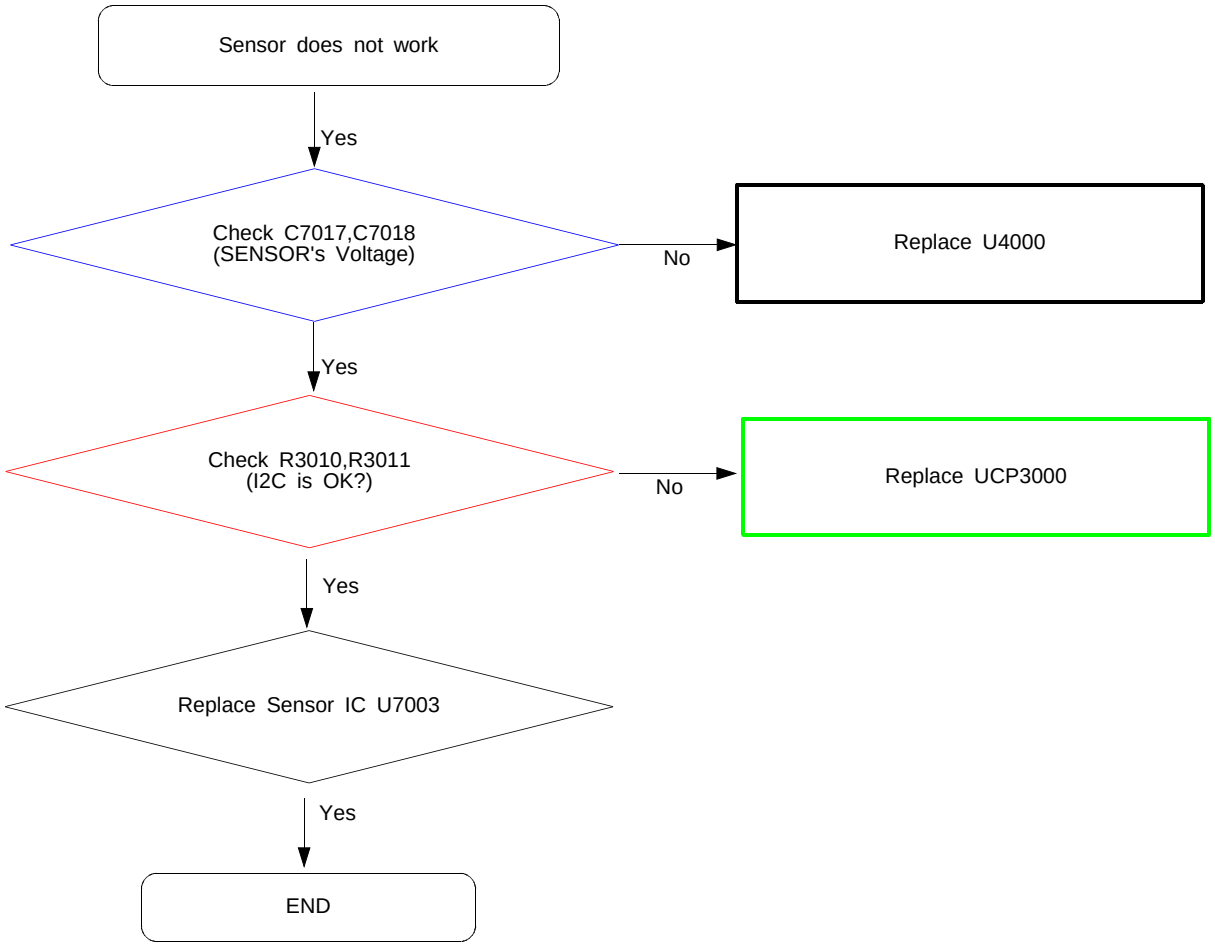

Confidential and proprietary-the contents in this service guide subject to change without prior notice.
Distribution, transmission, or infringement of any content or data from this document without Samsung's written authorization is strictly prohibited.

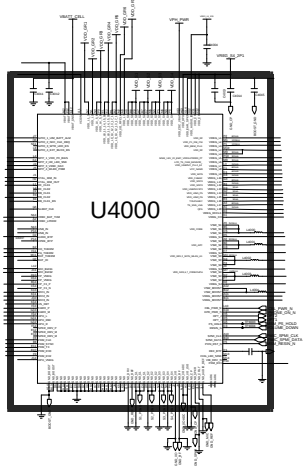

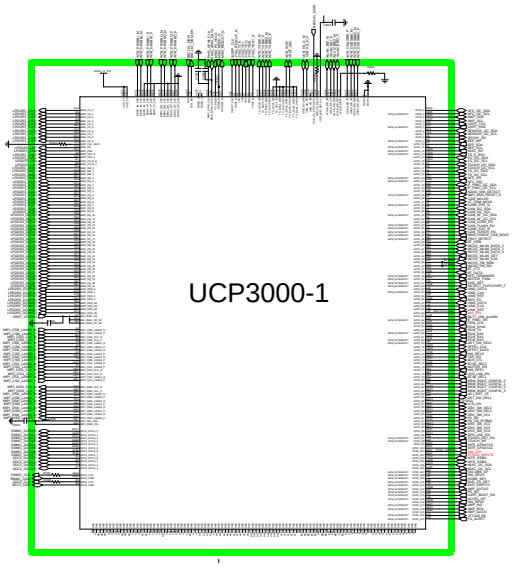

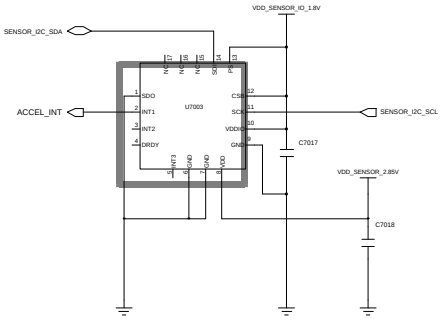

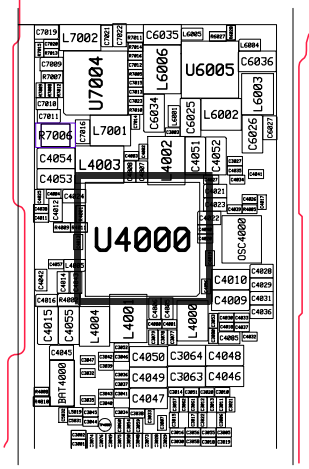

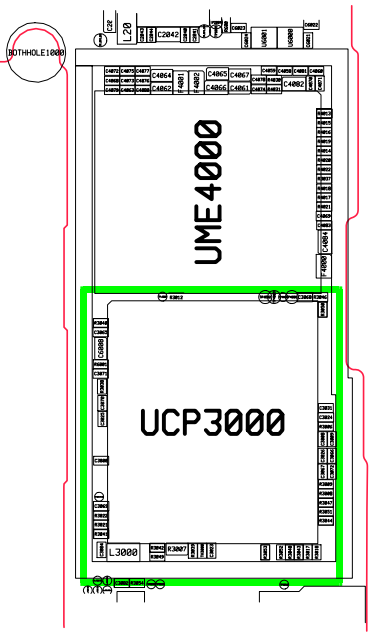

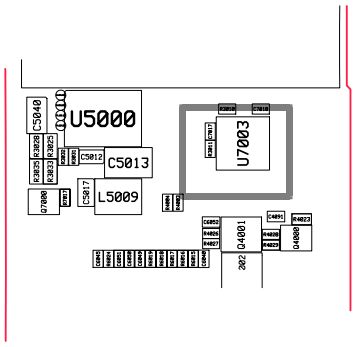

Confidential and proprietary-the contents in this service guide subject to change without prior notice.
Distribution, transmission, or infringement of any content or data from this document without Samsung's written authorization is strictly prohibited.

8-3-8. Speaker Part

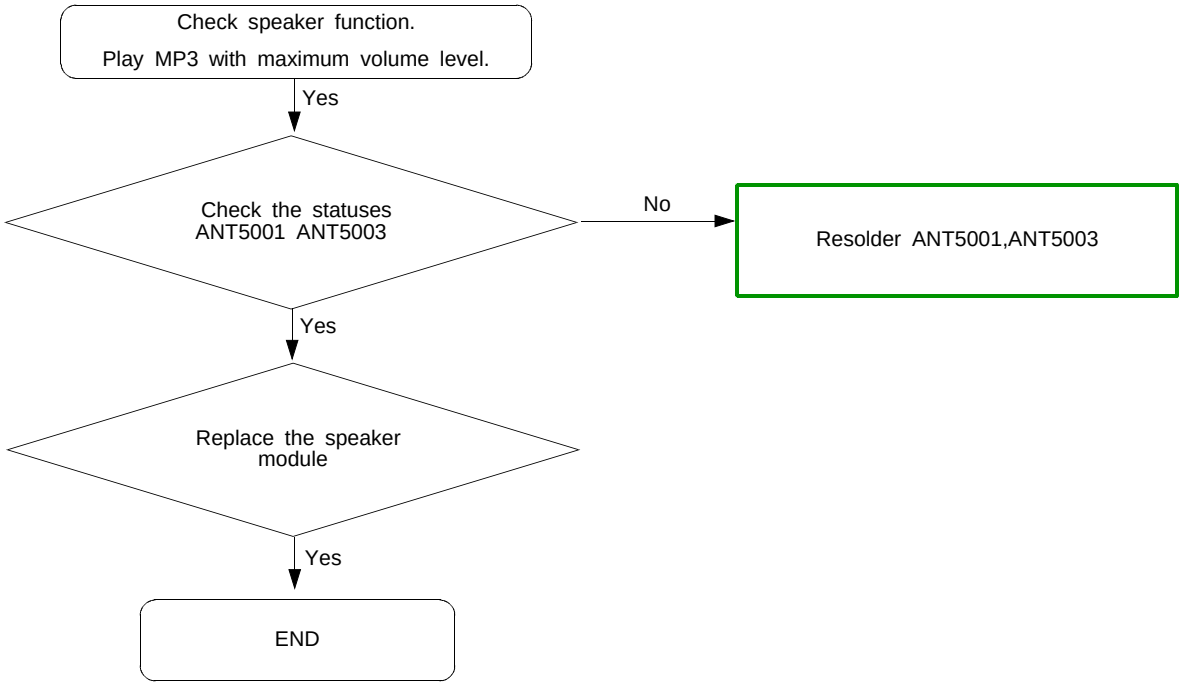

Confidential and proprietary-the contents in this service guide subject to change without prior notice.
Distribution, transmission, or infringement of any content or data from this document without Samsung's written authorization is strictly prohibited.

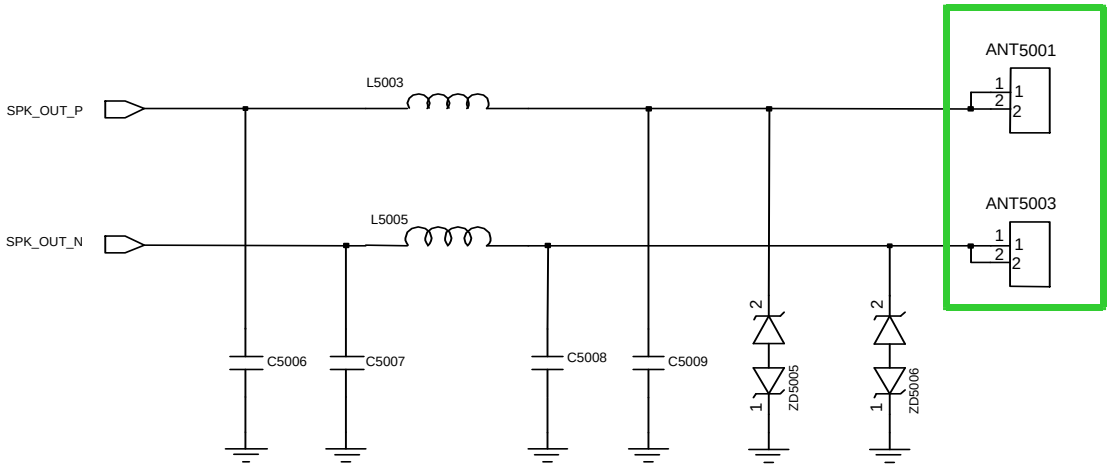

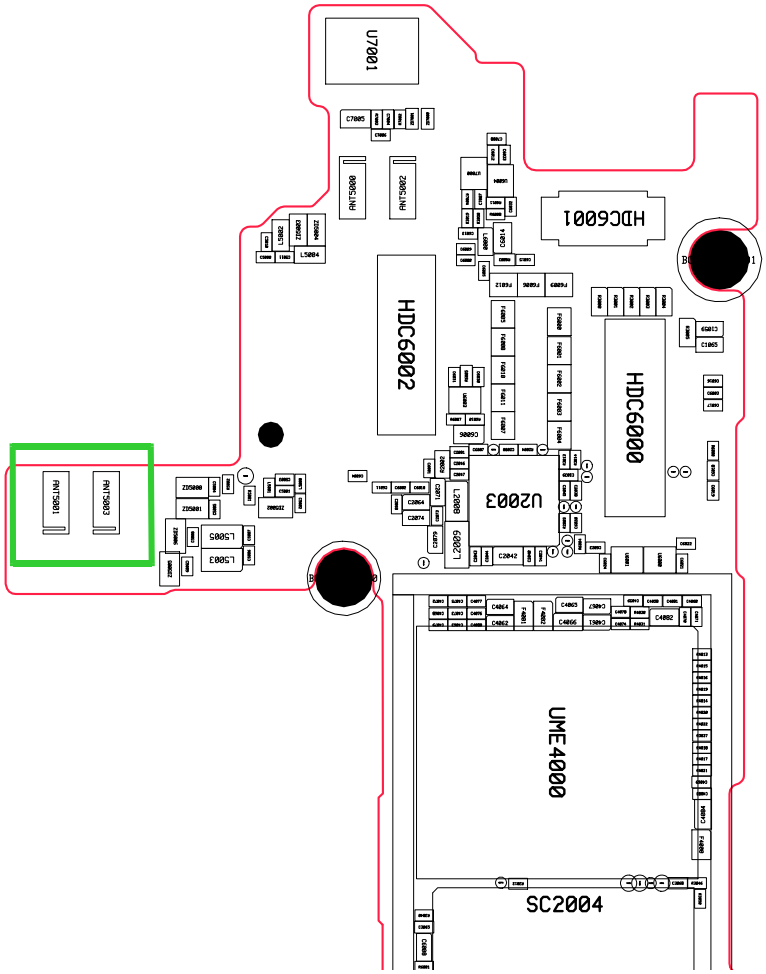

Confidential and proprietary-the contents in this service guide subject to change without prior notice.
Distribution, transmission, or infringement of any content or data from this document without Samsung's written authorization is strictly prohibited.

8-3-9. Receiver Part

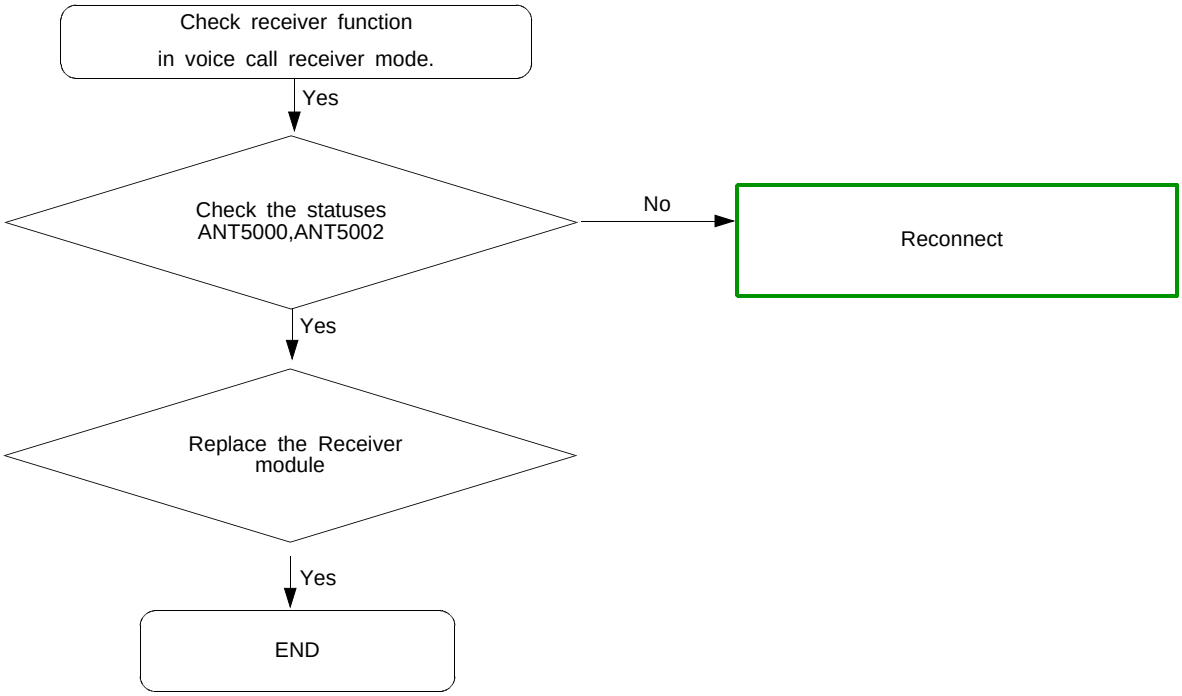

Confidential and proprietary-the contents in this service guide subject to change without prior notice.
Distribution, transmission, or infringement of any content or data from this document without Samsung's written authorization is strictly prohibited.

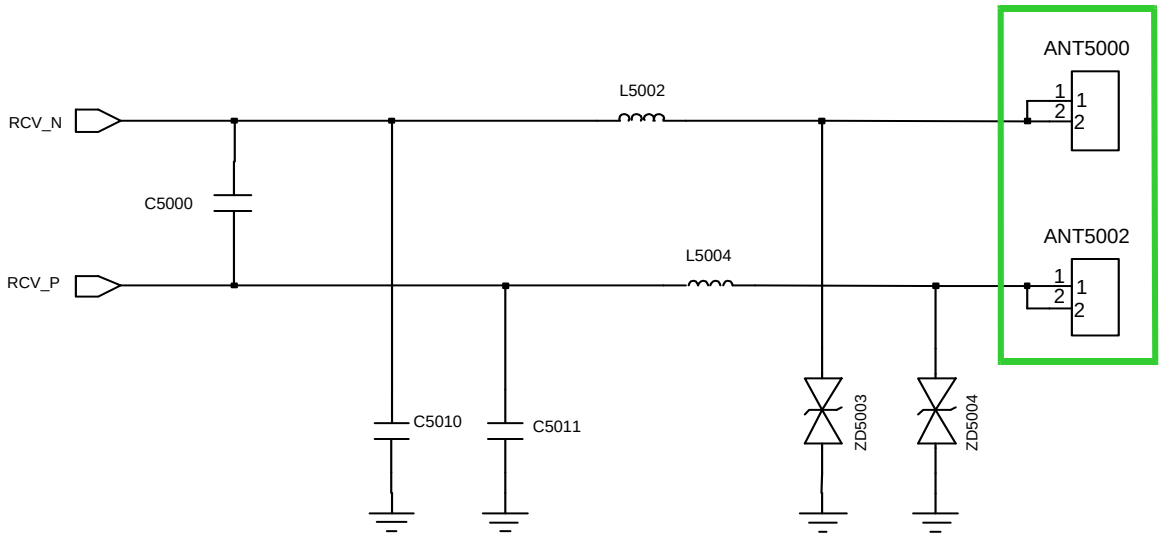

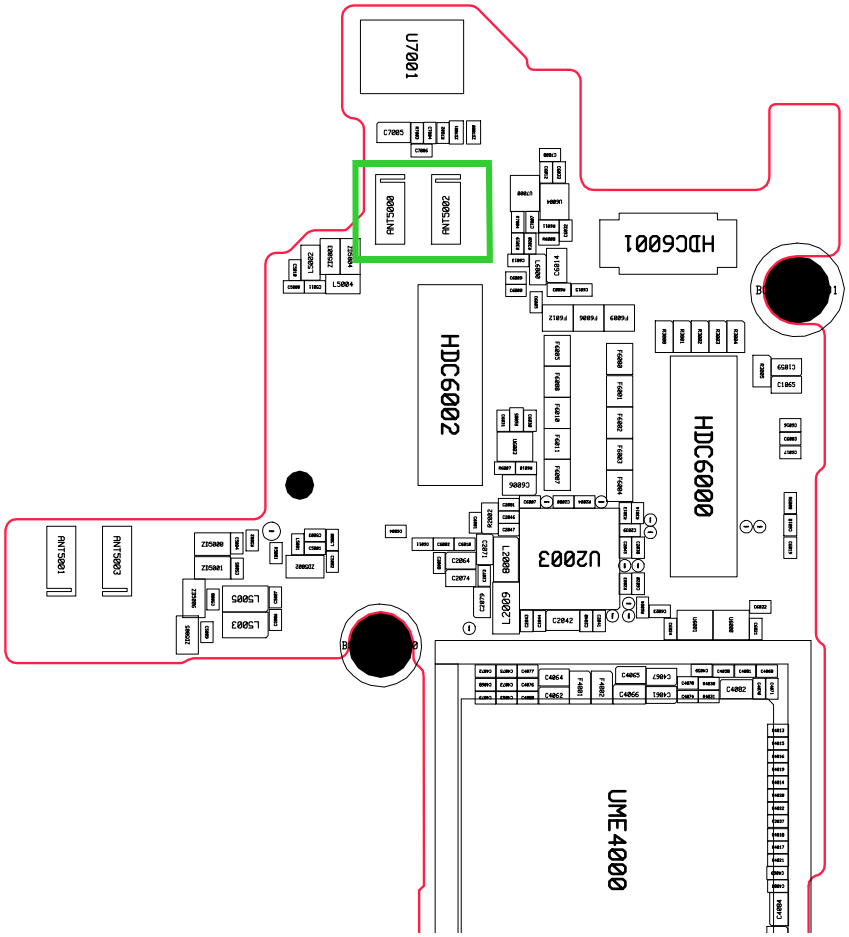

Confidential and proprietary-the contents in this service guide subject to change without prior notice.
Distribution, transmission, or infringement of any content or data from this document without Samsung's written authorization is strictly prohibited.

8-3-6. BT Part

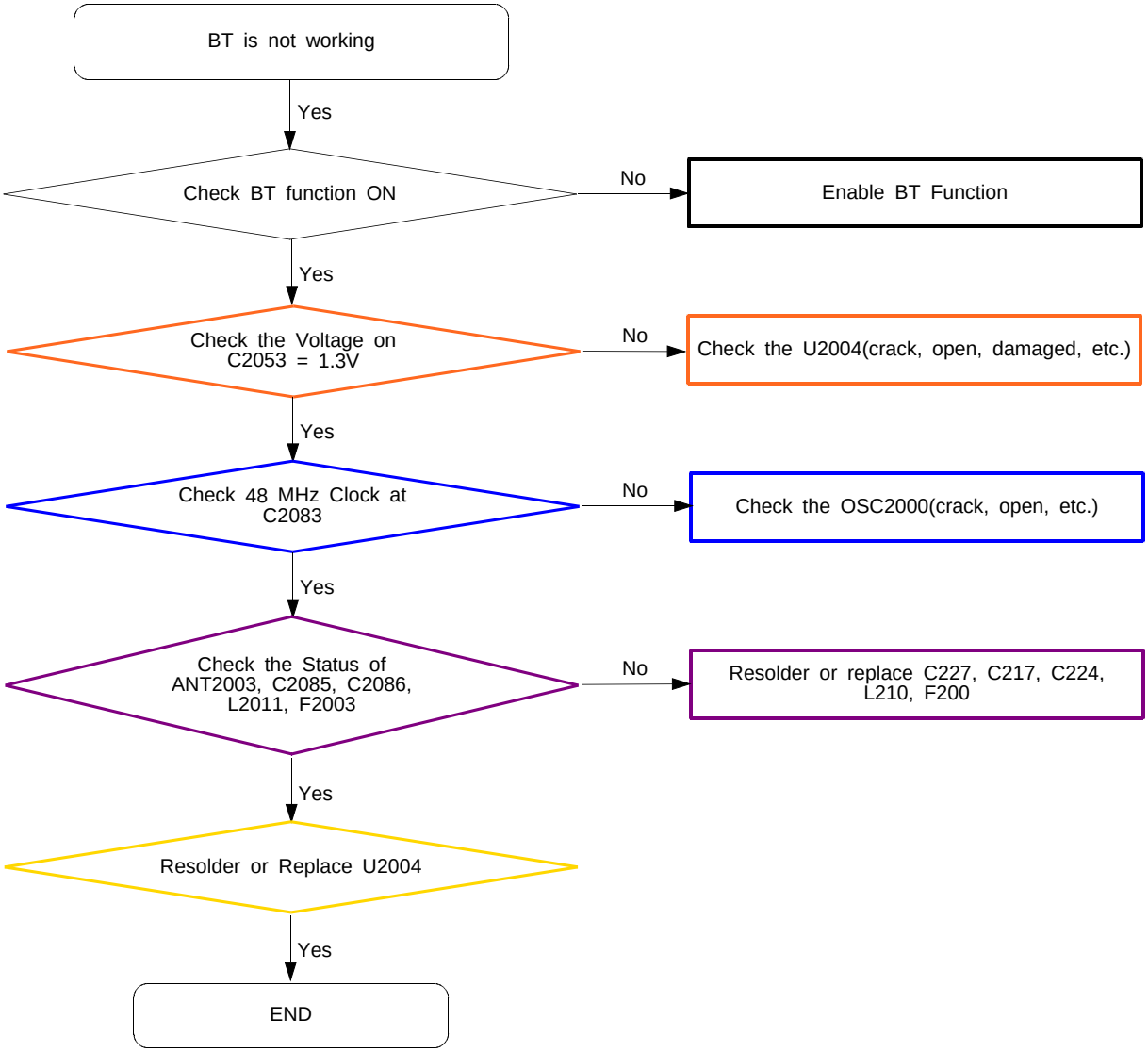

Confidential and proprietary-the contents in this service guide subject to change without prior notice.
Distribution, transmission, or infringement of any content or data from this document without Samsung's written authorization is strictly prohibited.

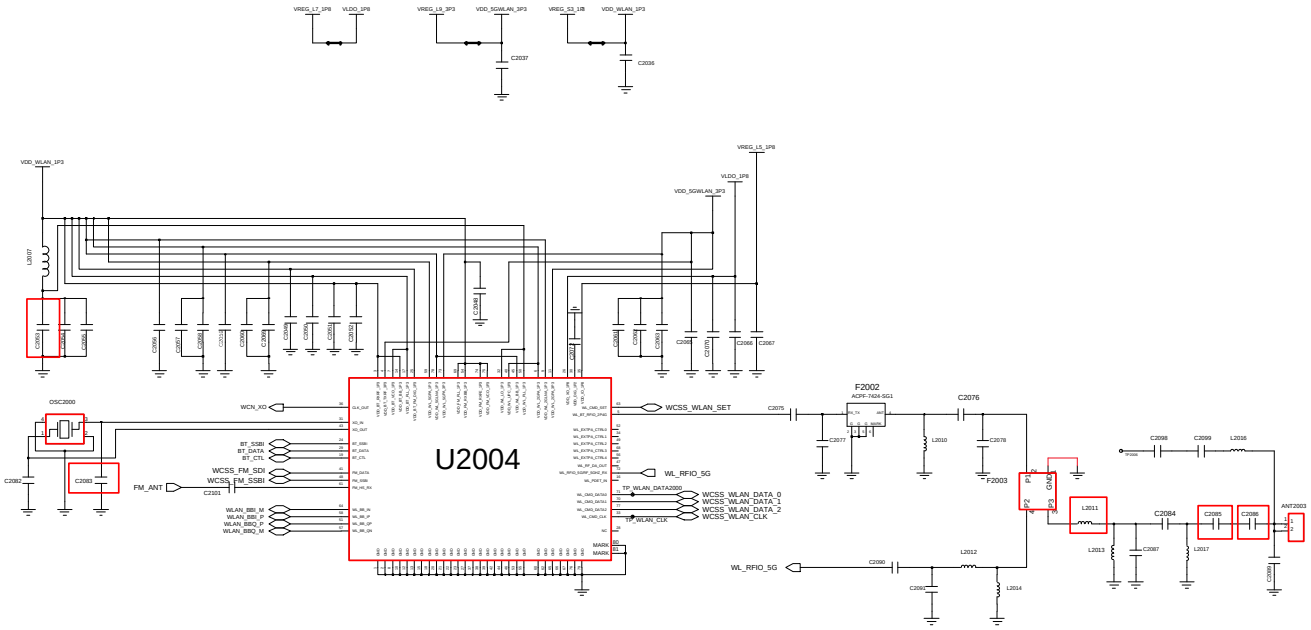

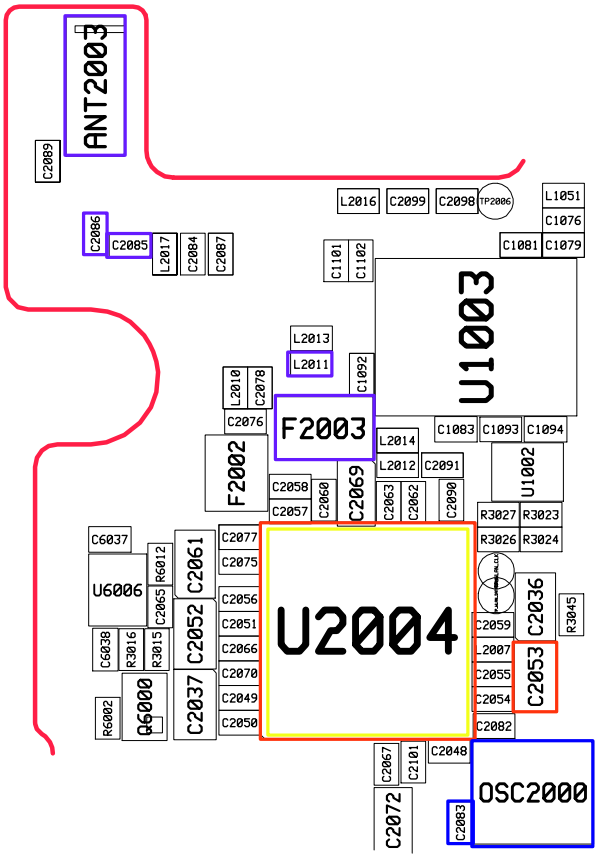

Confidential and proprietary-the contents in this service guide subject to change without prior notice.
Distribution, transmission, or infringement of any content or data from this document without Samsung's written authorization is strictly prohibited.

8-3-7. WIFI Part

Confidential and proprietary-the contents in this service guide subject to change without prior notice.
Distribution, transmission, or infringement of any content or data from this document without Samsung's written authorization is strictly prohibited.

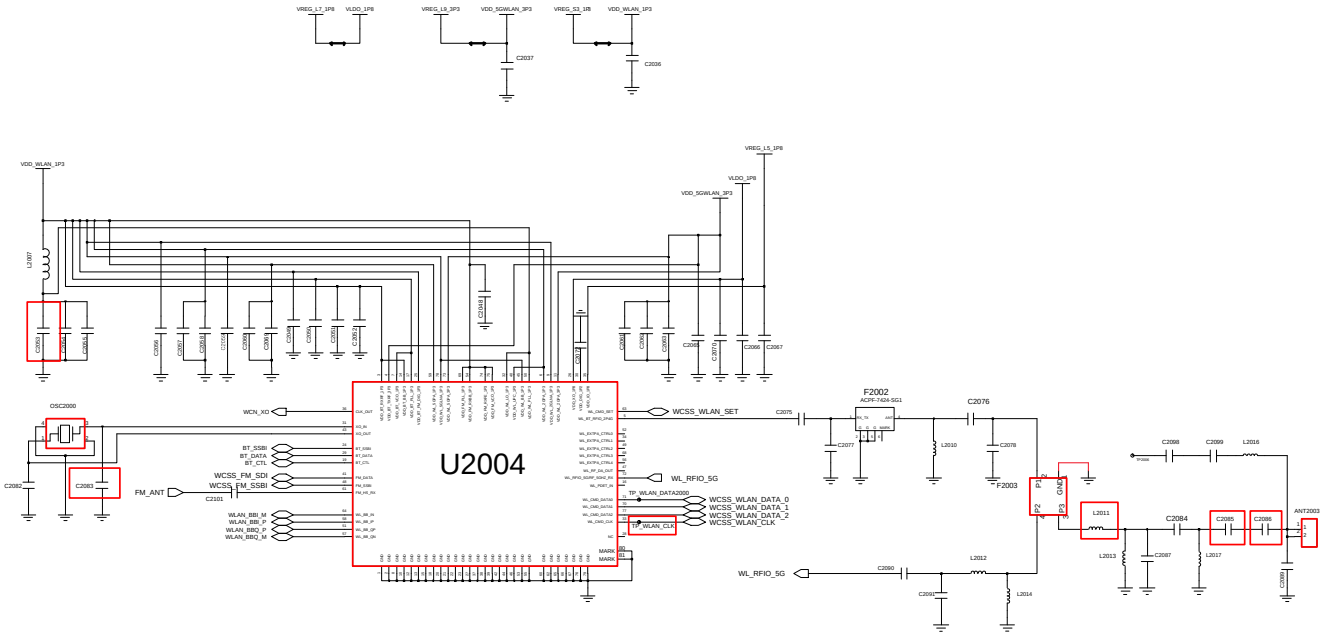

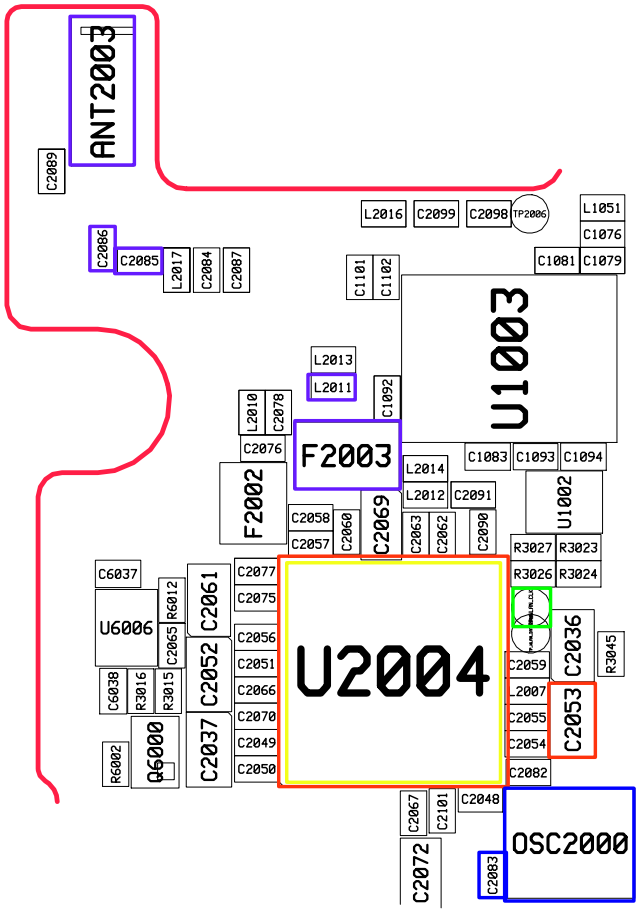

Confidential and proprietary-the contents in this service guide subject to change without prior notice.
Distribution, transmission, or infringement of any content or data from this document without Samsung's written authorization is strictly prohibited.

8-3-8. GPS Part

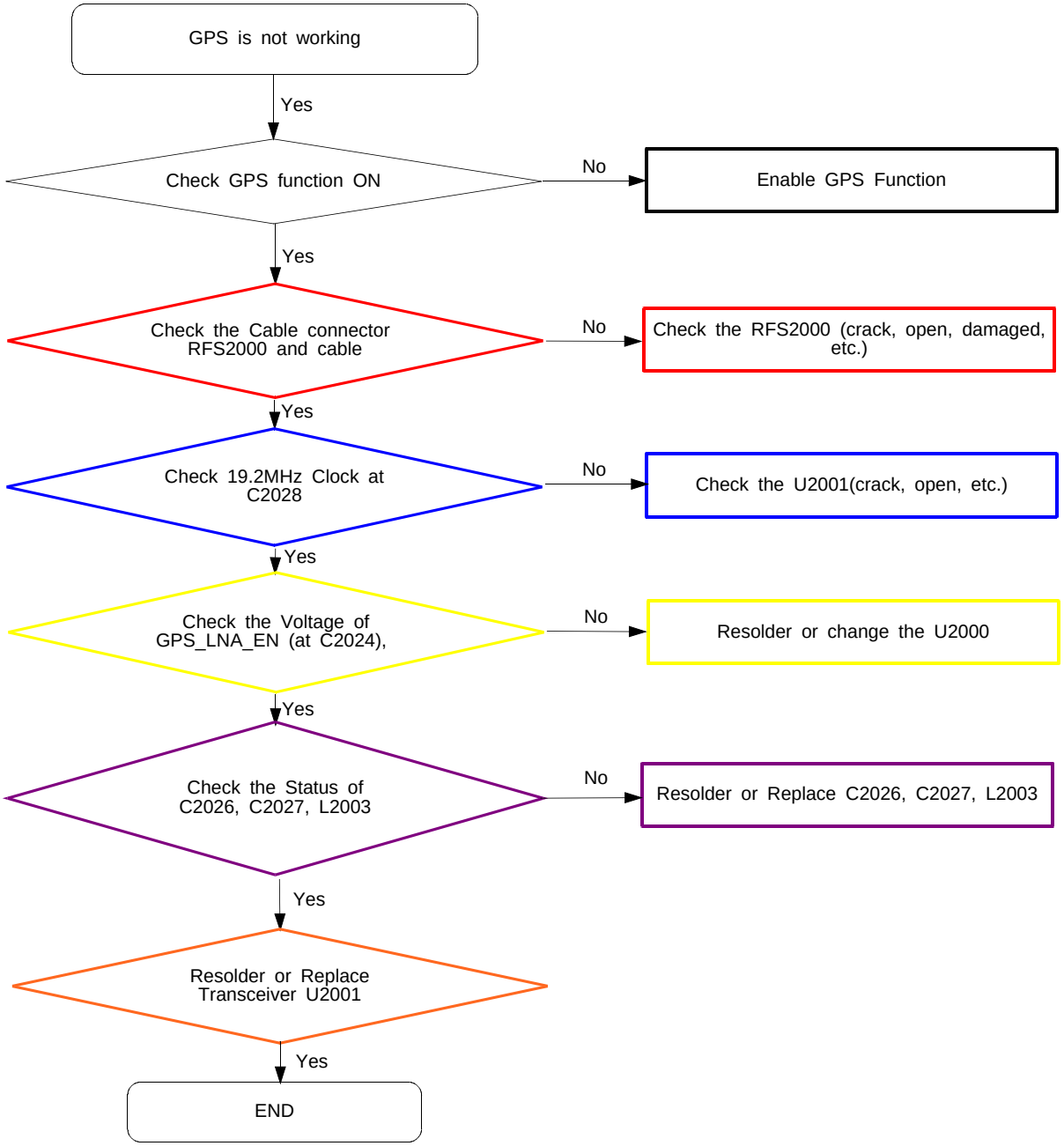

Confidential and proprietary-the contents in this service guide subject to change without prior notice.
Distribution, transmission, or infringement of any content or data from this document without Samsung's written authorization is strictly prohibited.

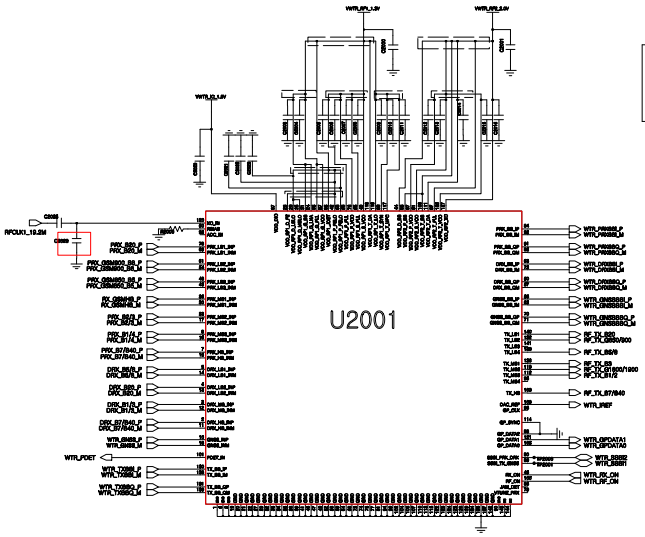

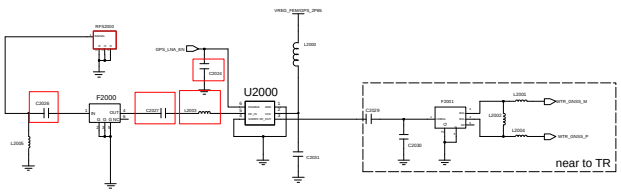

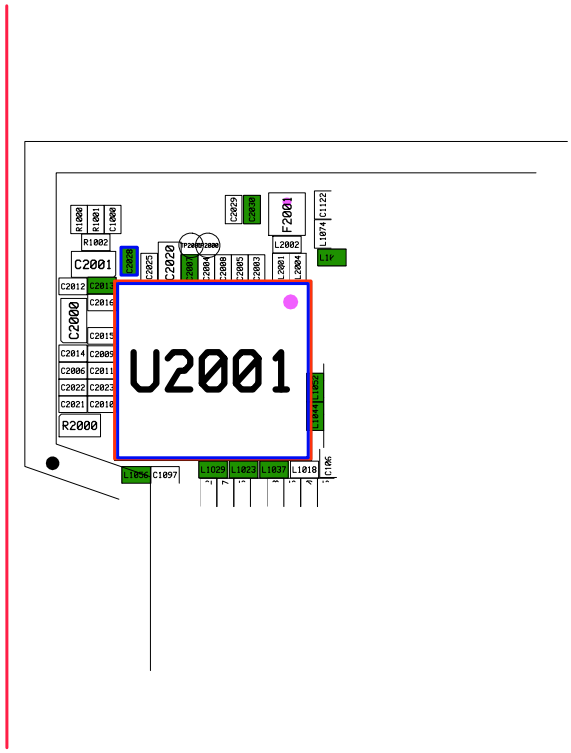

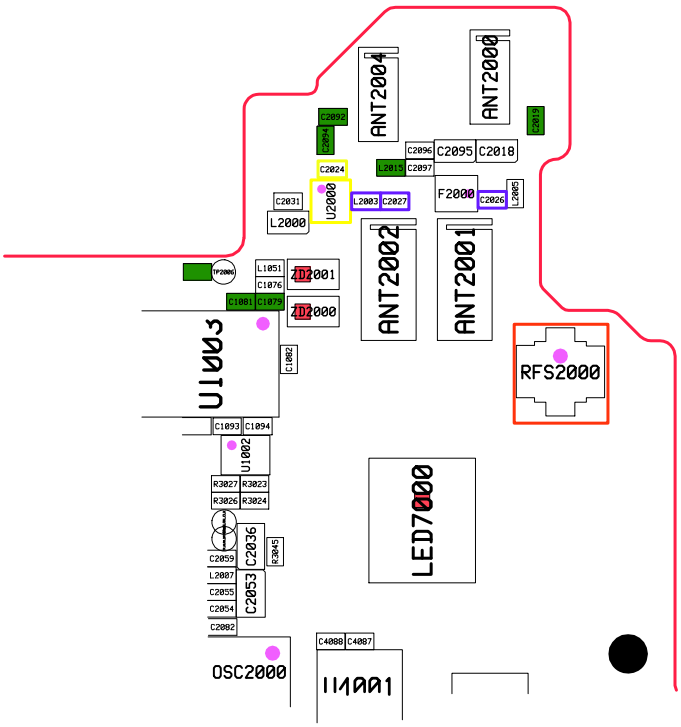

Confidential and proprietary-the contents in this service guide subject to change without prior notice.
Distribution, transmission, or infringement of any content or data from this document without Samsung's written authorization is strictly prohibited.

8-3-12. LCD

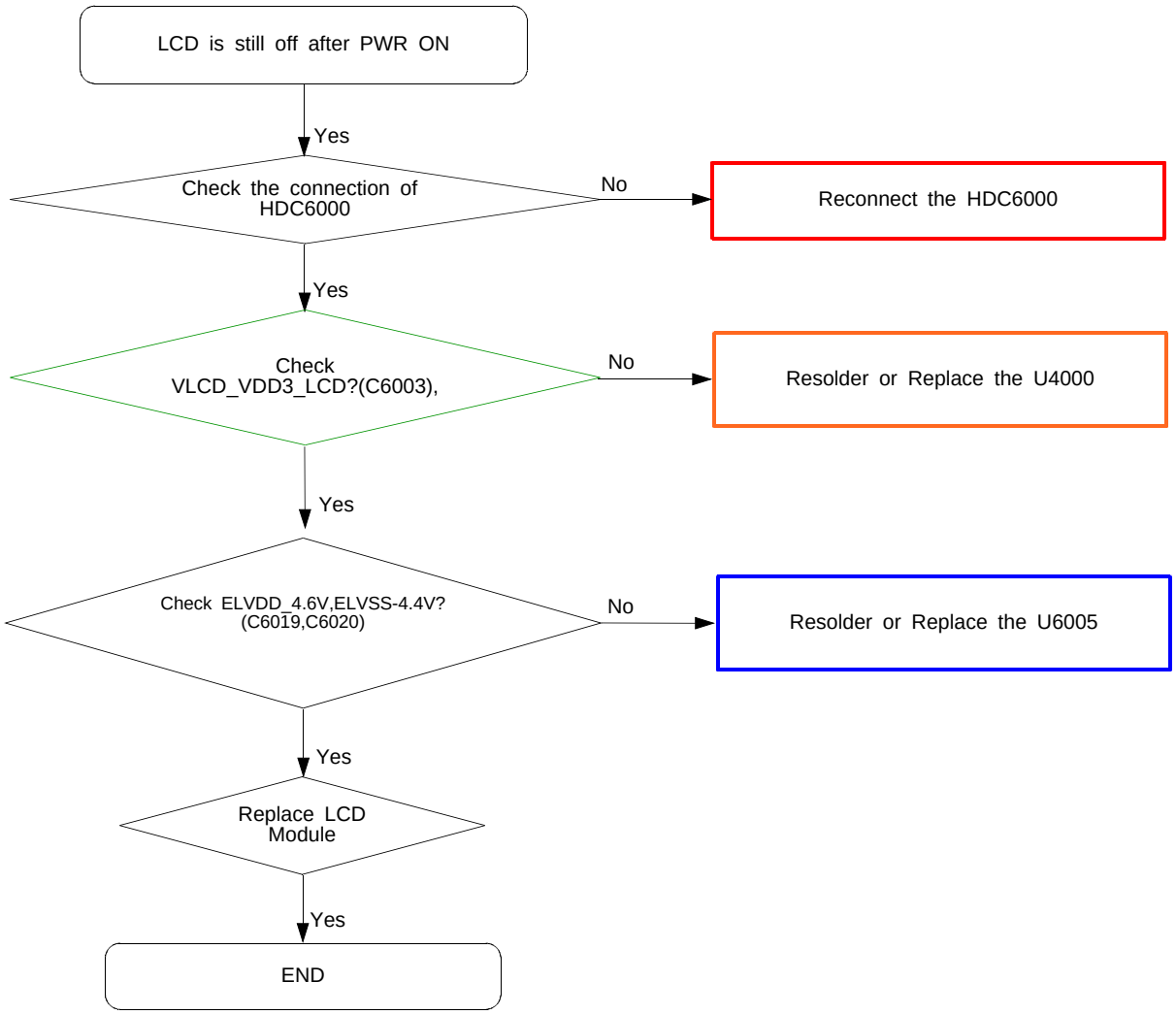

Confidential and proprietary-the contents in this service guide subject to change without prior notice.
Distribution, transmission, or infringement of any content or data from this document without Samsung's written authorization is strictly prohibited.

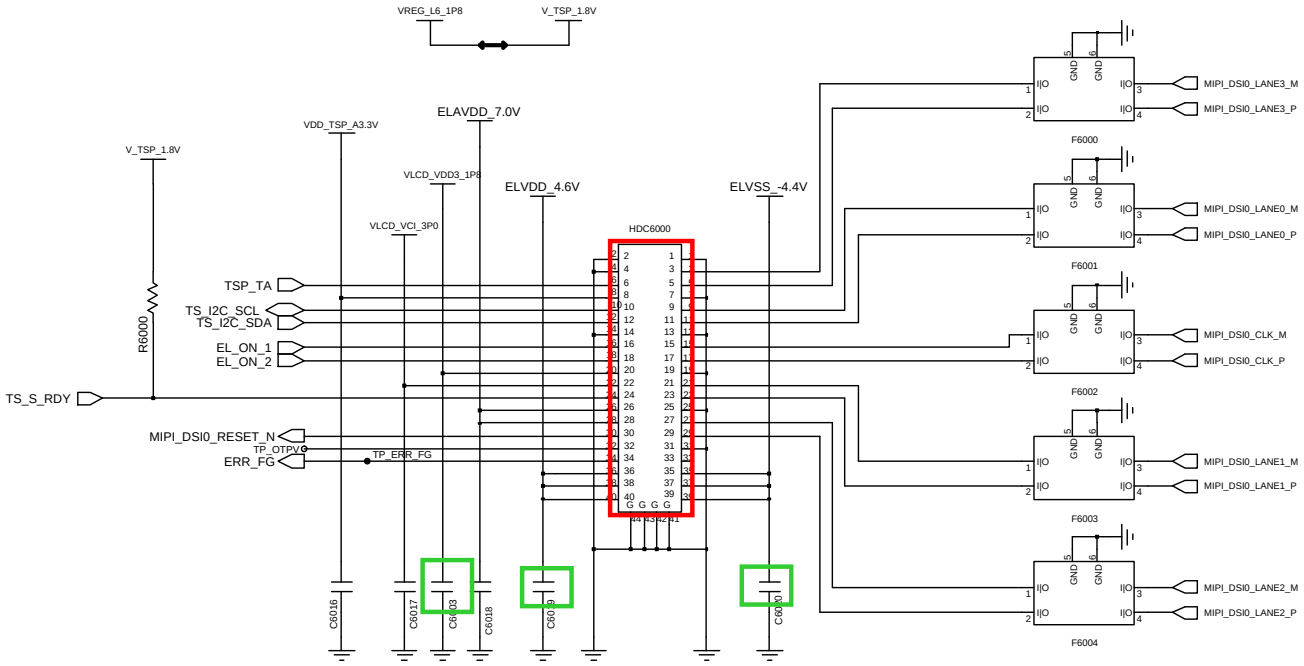

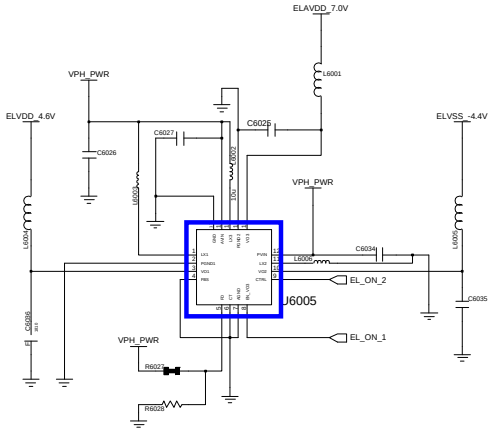

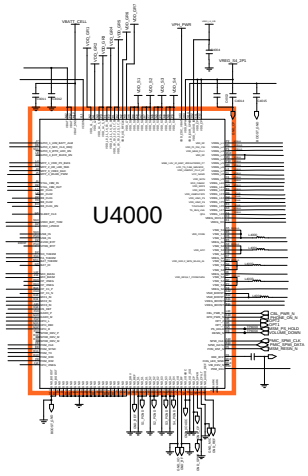

Confidential and proprietary-the contents in this service guide subject to change without prior notice.
Distribution, transmission, or infringement of any content or data from this document without Samsung's written authorization is strictly prohibited.

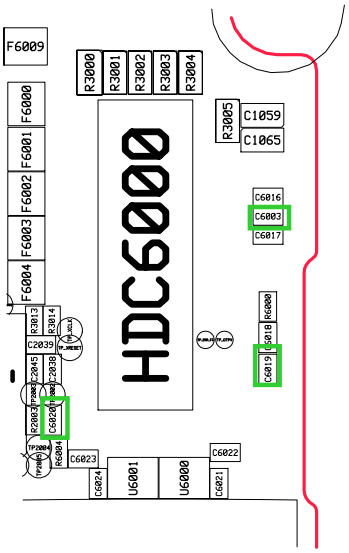

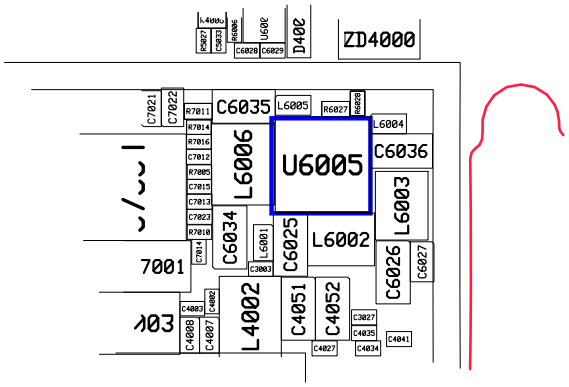

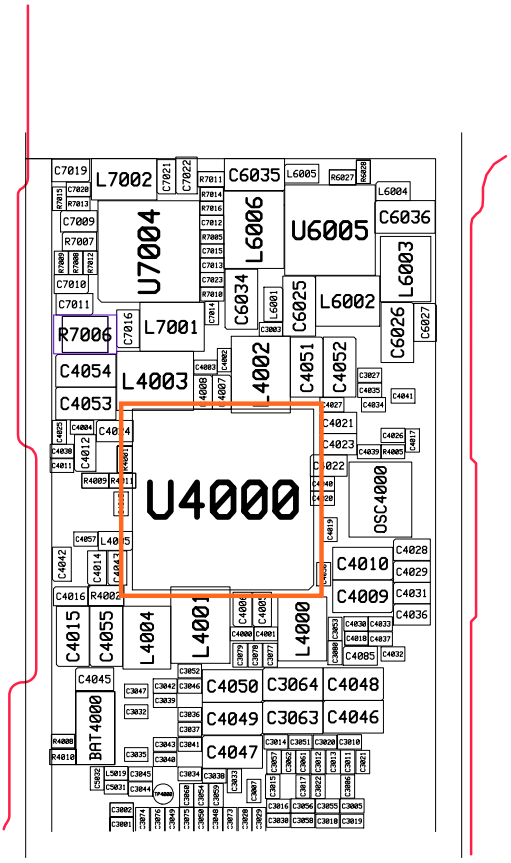

Confidential and proprietary-the contents in this service guide subject to change without prior notice.
Distribution, transmission, or infringement of any content or data from this document without Samsung's written authorization is strictly prohibited.

8-3-13. 13M CAM

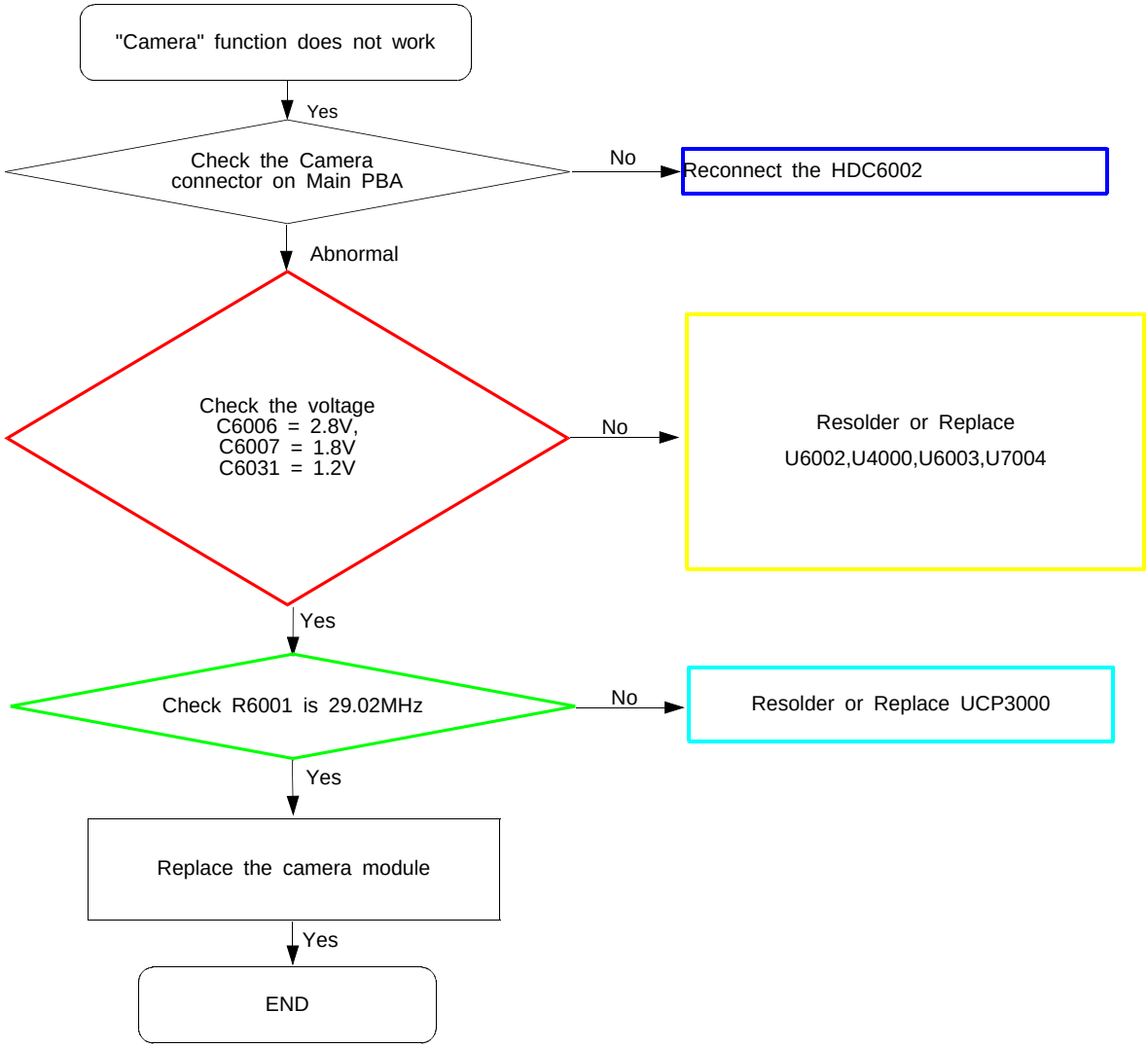

Confidential and proprietary-the contents in this service guide subject to change without prior notice.
Distribution, transmission, or infringement of any content or data from this document without Samsung's written authorization is strictly prohibited.

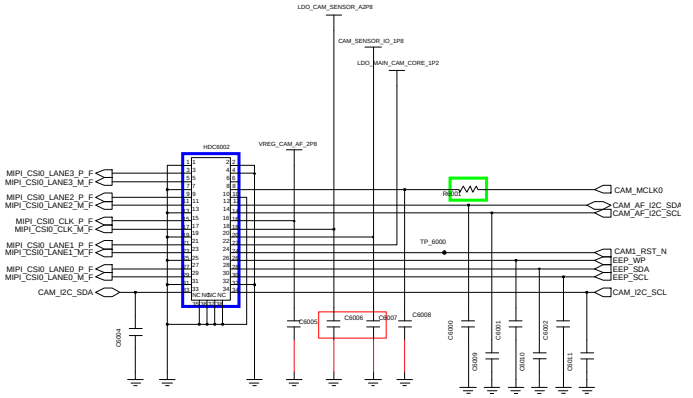

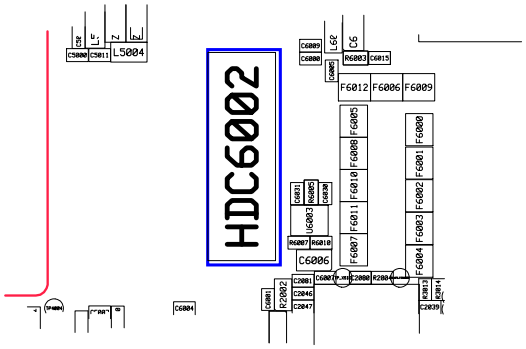

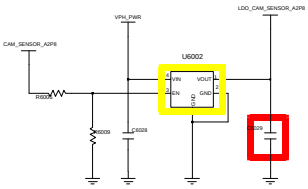

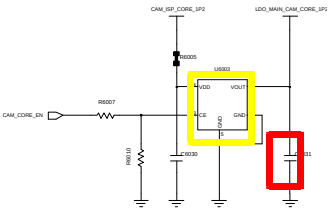

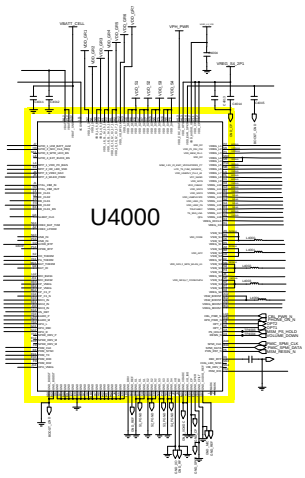

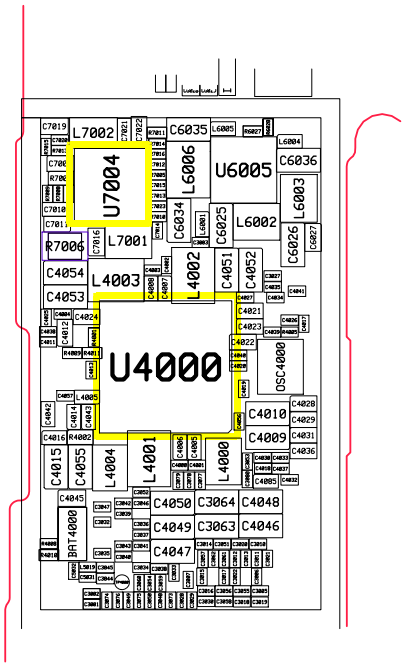

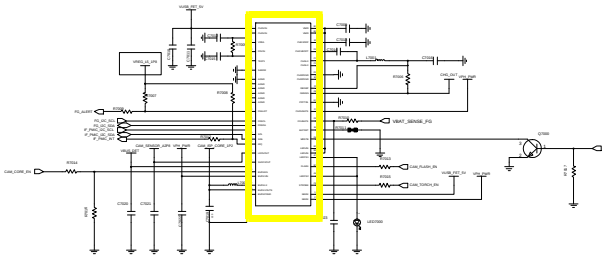

Confidential and proprietary-the contents in this service guide subject to change without prior notice.
Distribution, transmission, or infringement of any content or data from this document without Samsung's written authorization is strictly prohibited.

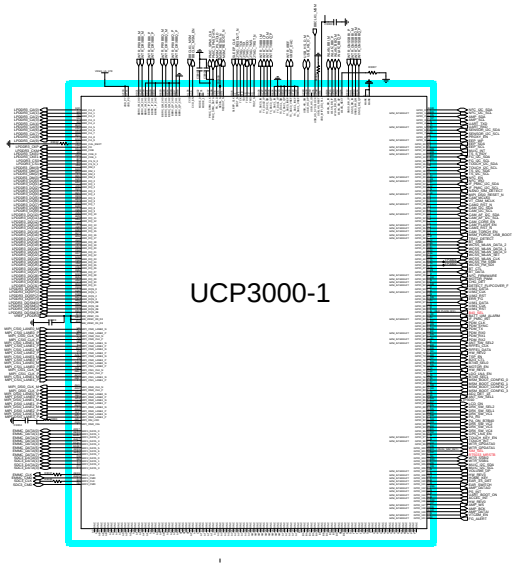

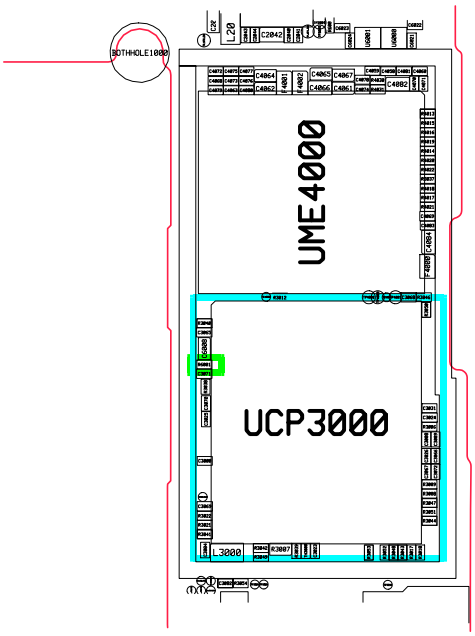

Confidential and proprietary-the contents in this service guide subject to change without prior notice.
Distribution, transmission, or infringement of any content or data from this document without Samsung's written authorization is strictly prohibited.

8-3-14. VT CAM

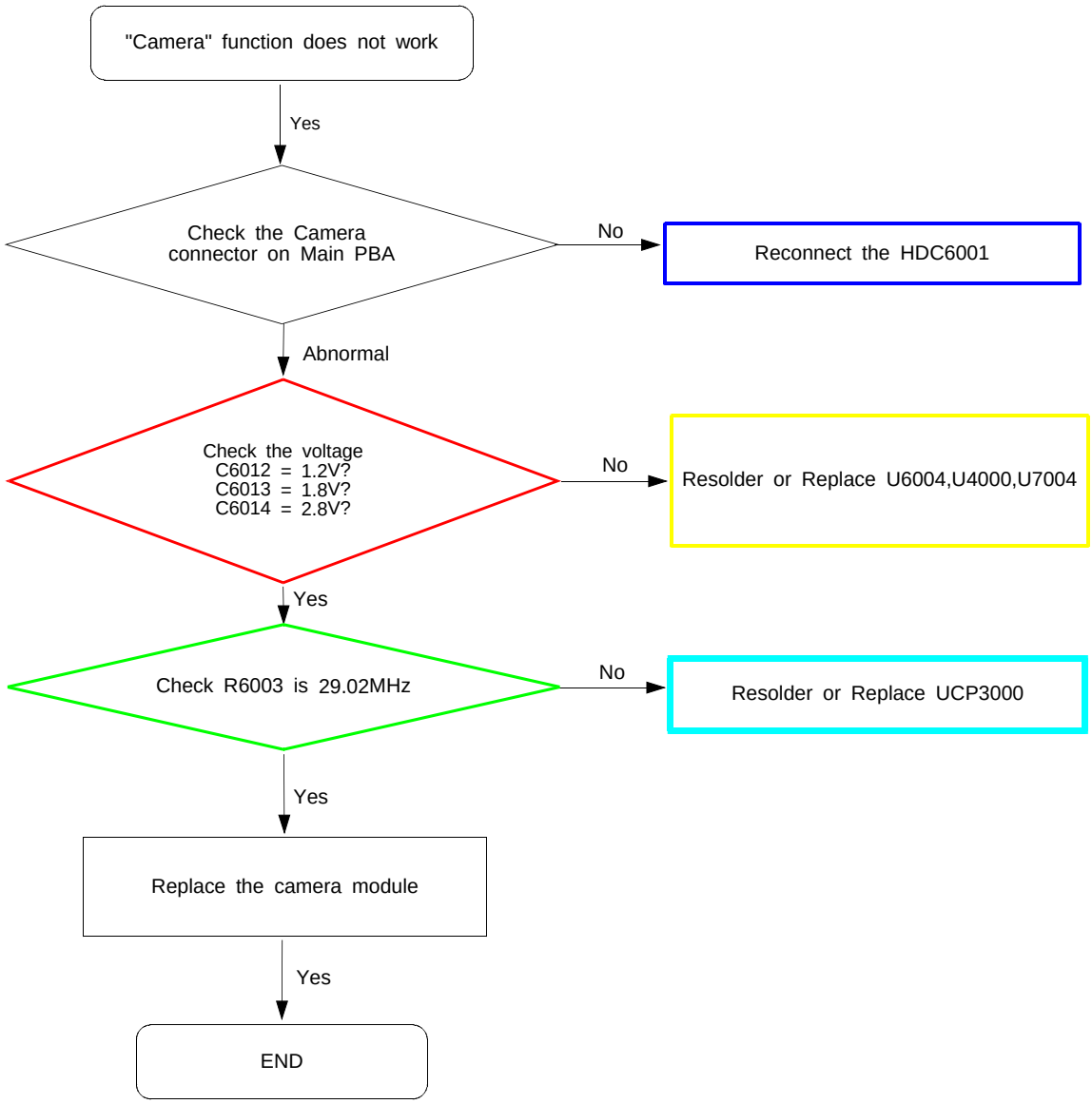

Confidential and proprietary-the contents in this service guide subject to change without prior notice.
Distribution, transmission, or infringement of any content or data from this document without Samsung's written authorization is strictly prohibited.

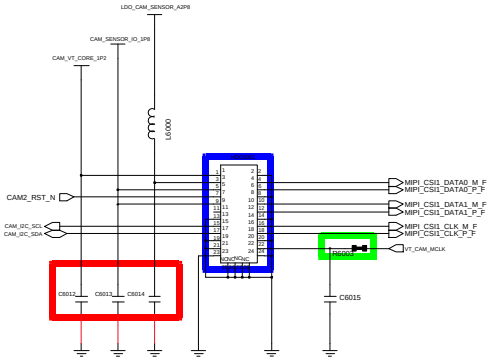

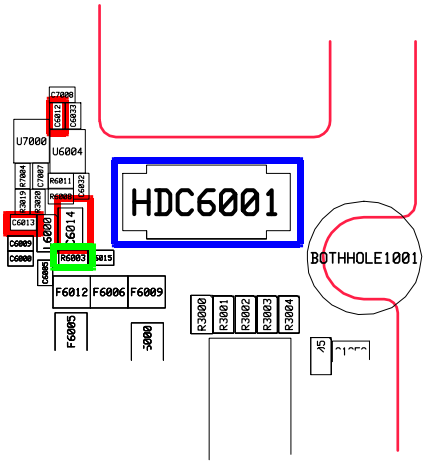

Confidential and proprietary-the contents in this service guide subject to change without prior notice.
Distribution, transmission, or infringement of any content or data from this document without Samsung's written authorization is strictly prohibited.

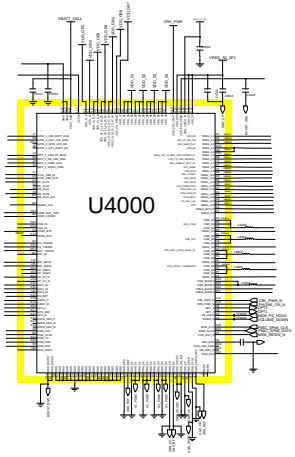

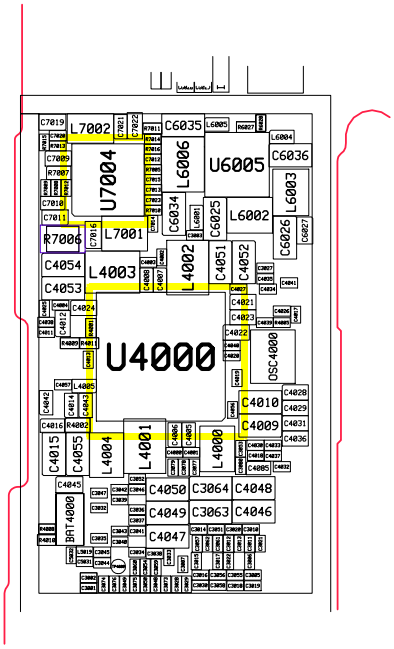

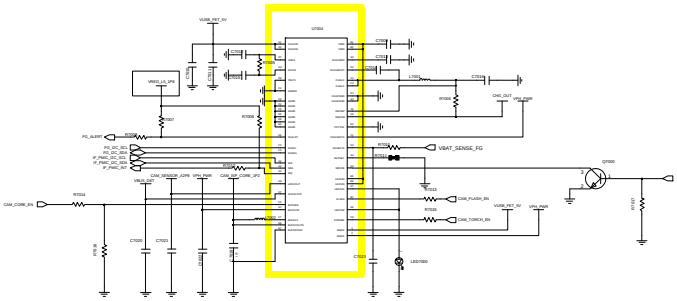

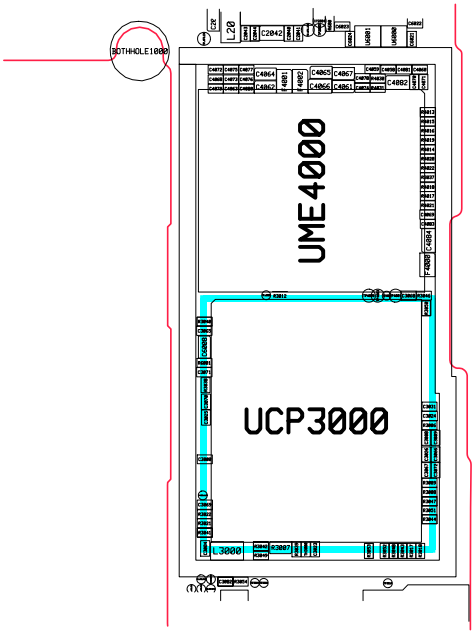

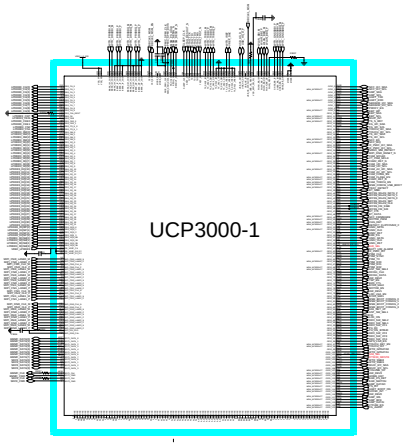

Confidential and proprietary-the contents in this service guide subject to change without prior notice.
Distribution, transmission, or infringement of any content or data from this document without Samsung's written authorization is strictly prohibited.

8-3-15. TSP

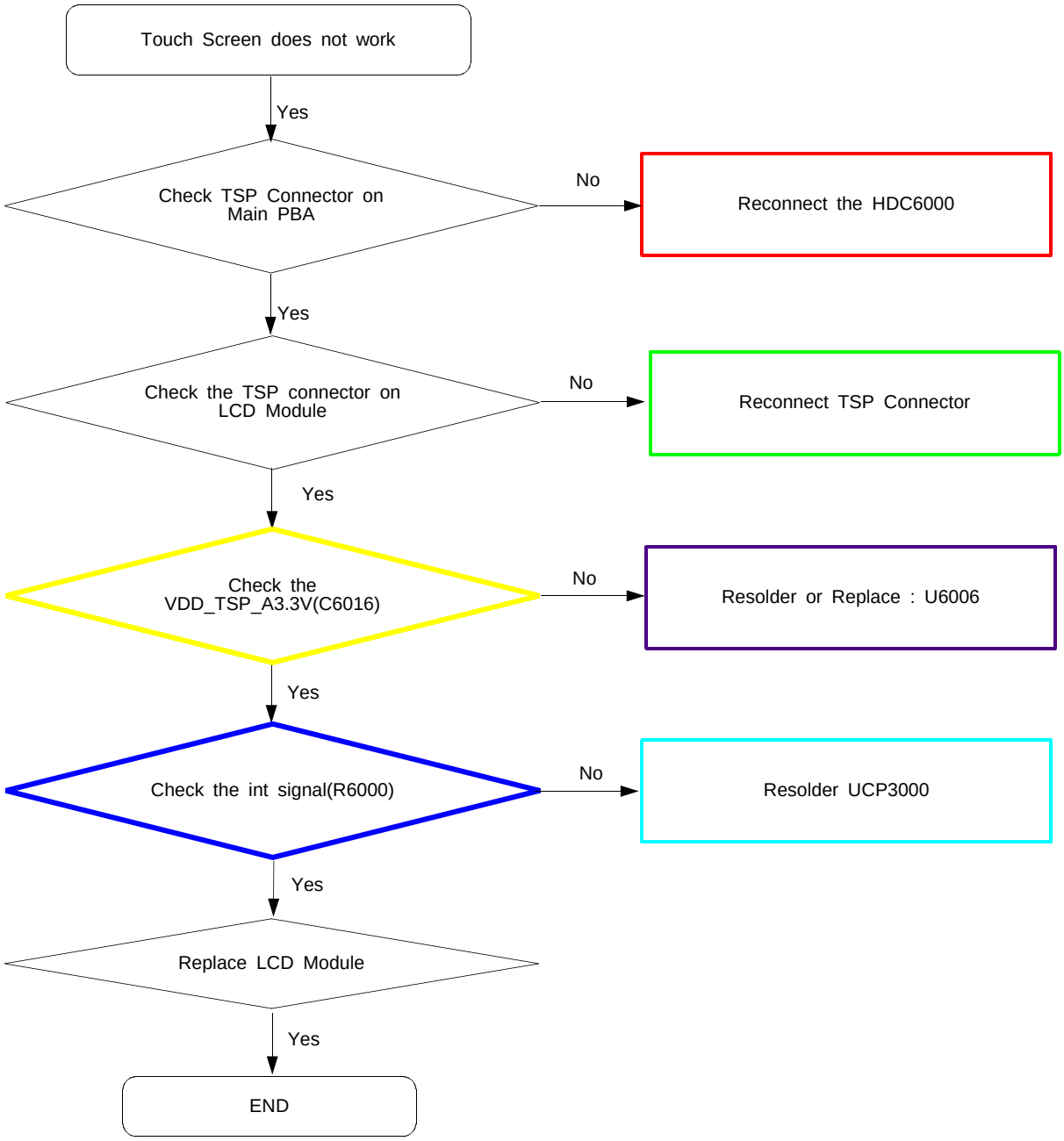

Confidential and proprietary-the contents in this service guide subject to change without prior notice.
Distribution, transmission, or infringement of any content or data from this document without Samsung's written authorization is strictly prohibited.

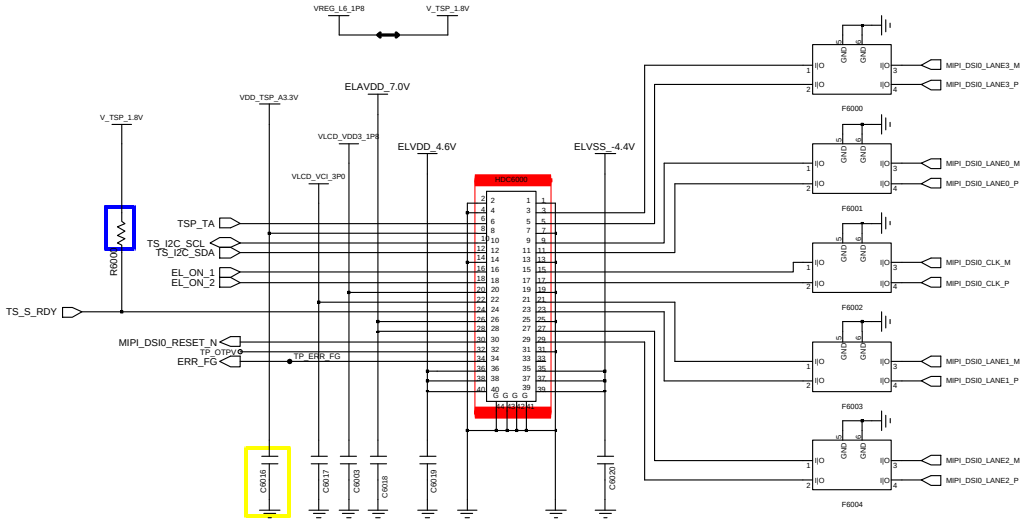

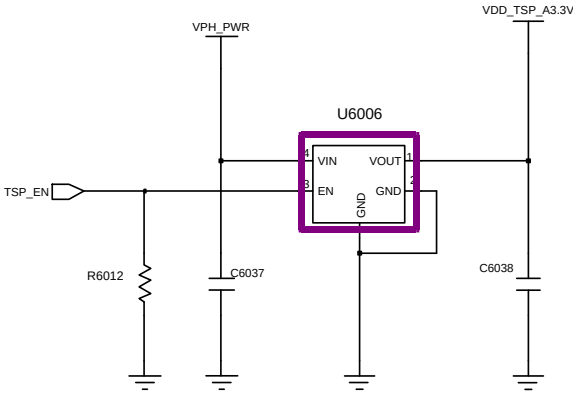

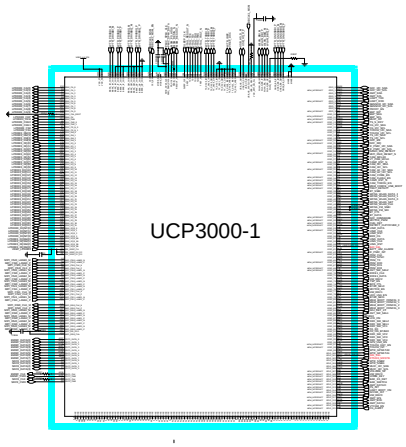

Confidential and proprietary-the contents in this service guide subject to change without prior notice.
Distribution, transmission, or infringement of any content or data from this document without Samsung's written authorization is strictly prohibited.

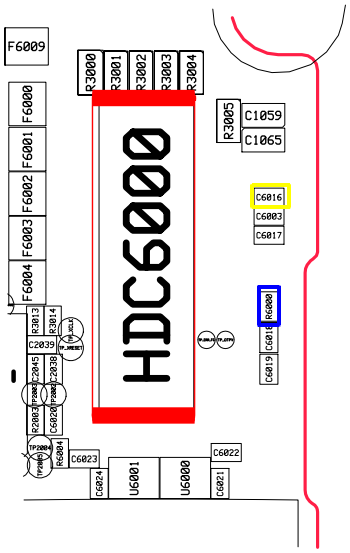

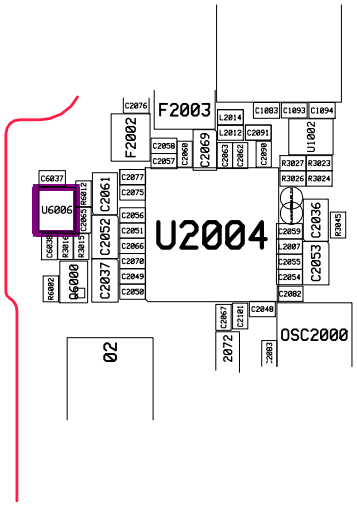

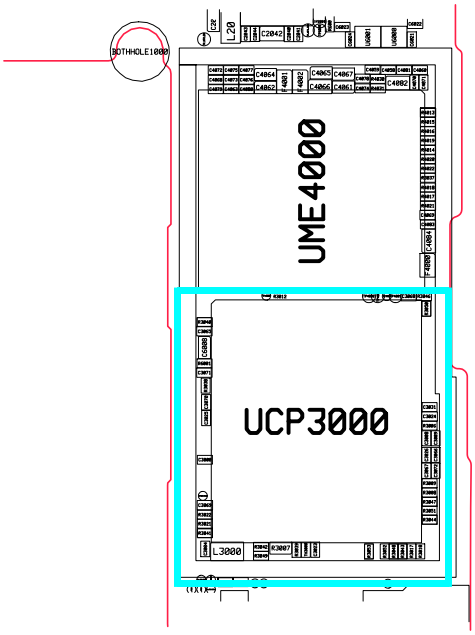

Confidential and proprietary-the contents in this service guide subject to change without prior notice.
Distribution, transmission, or infringement of any content or data from this document without Samsung's written authorization is strictly prohibited.

8-3-16. Ear Jack

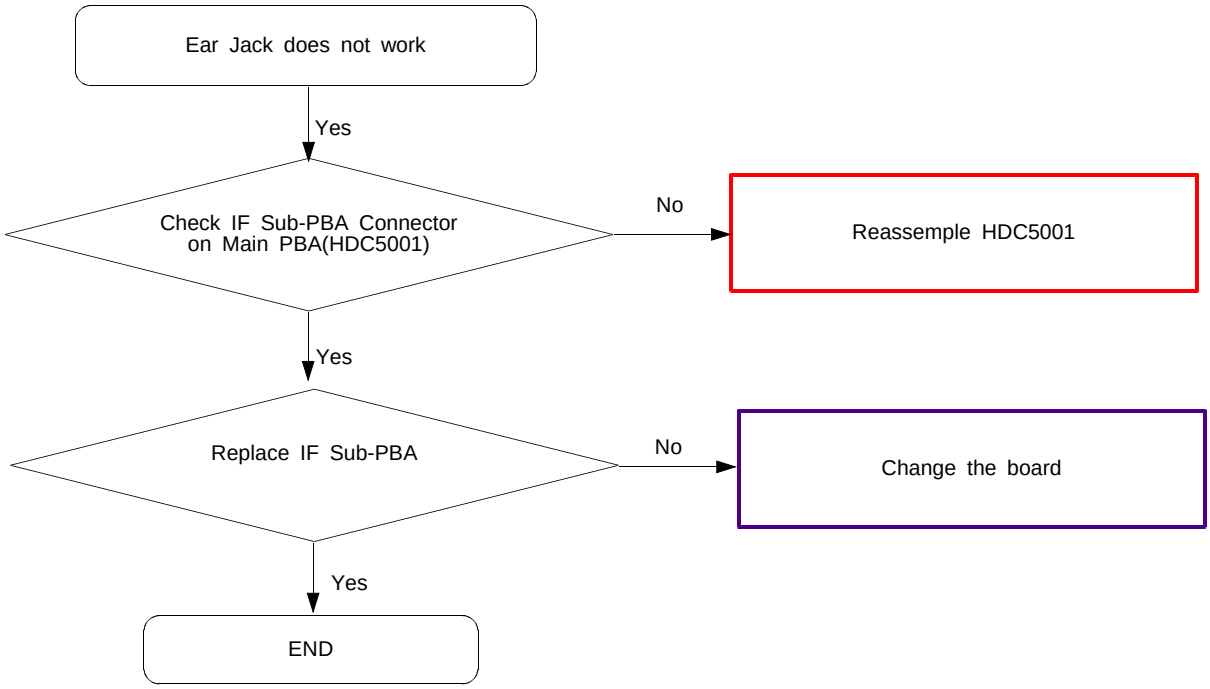

Confidential and proprietary-the contents in this service guide subject to change without prior notice.
Distribution, transmission, or infringement of any content or data from this document without Samsung's written authorization is strictly prohibited.

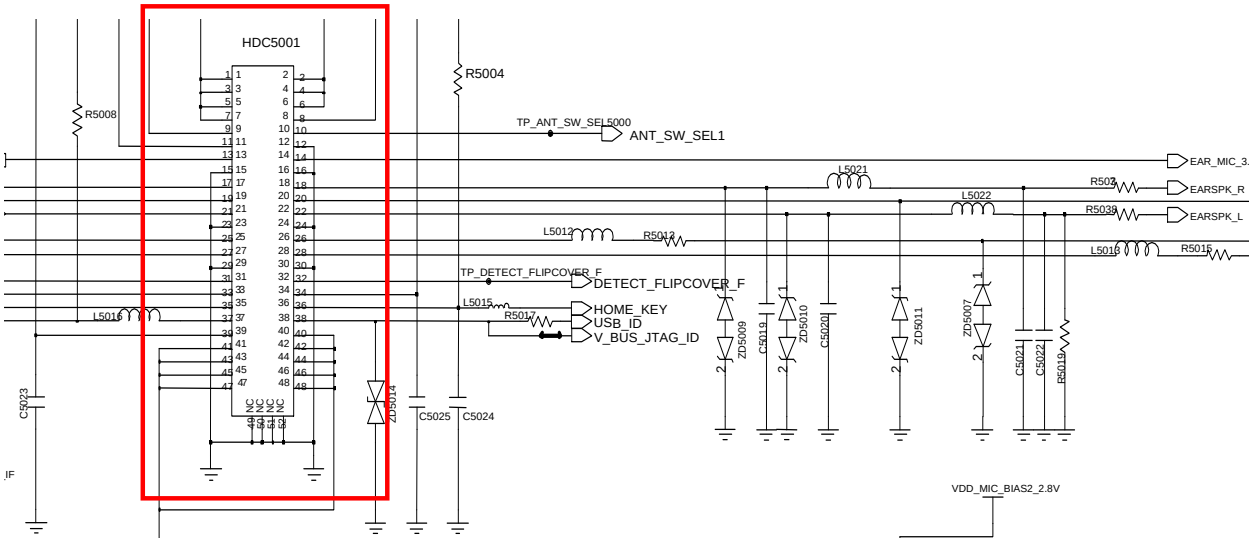

Confidential and proprietary-the contents in this service guide subject to change without prior notice.
Distribution, transmission, or infringement of any content or data from this document without Samsung's written authorization is strictly prohibited.

8-3-17. Motor

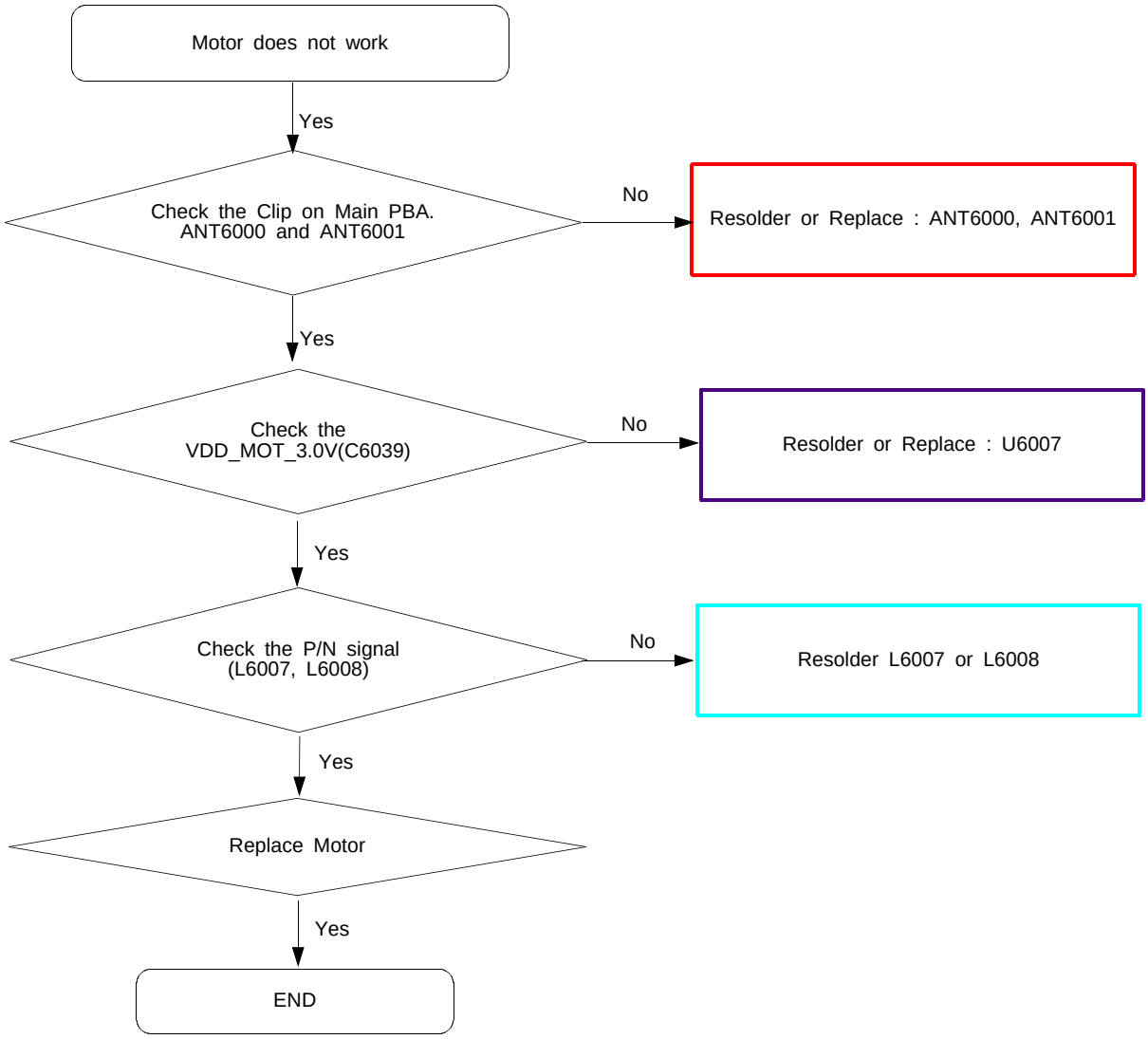

Confidential and proprietary-the contents in this service guide subject to change without prior notice.
Distribution, transmission, or infringement of any content or data from this document without Samsung's written authorization is strictly prohibited.

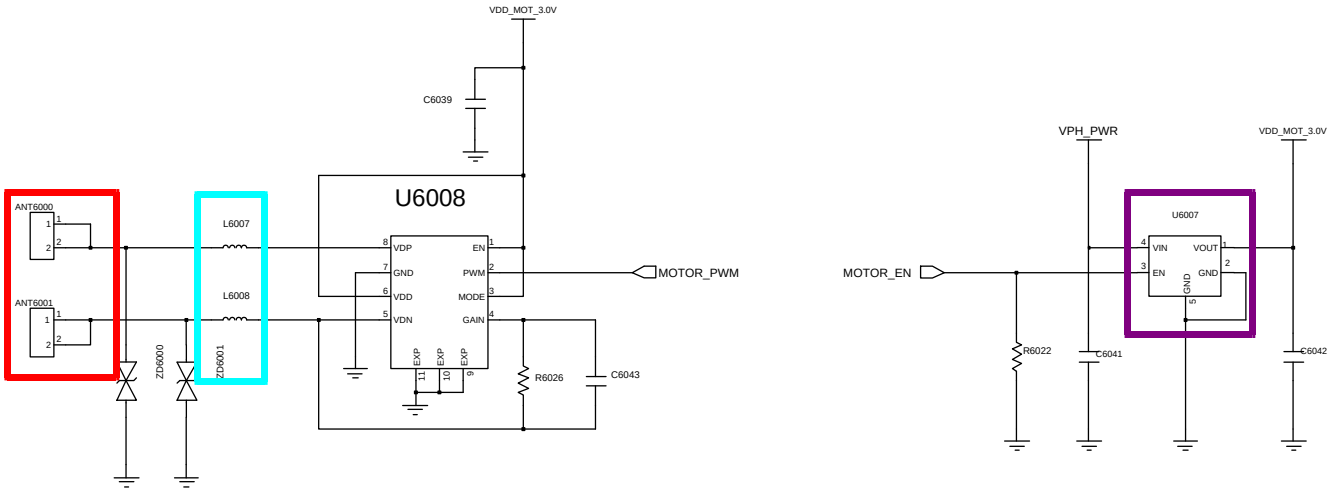

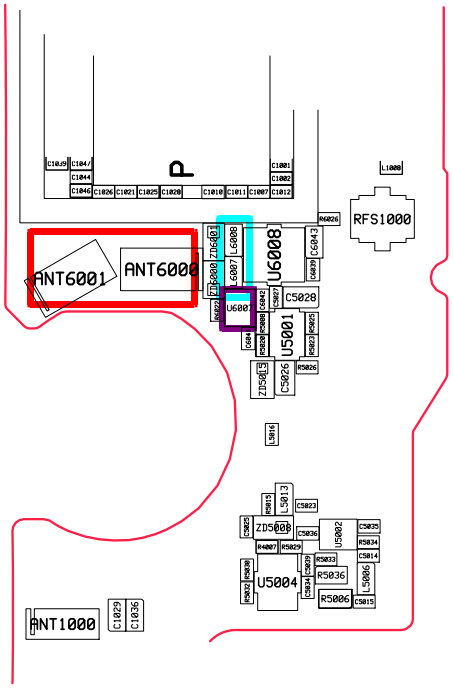

Confidential and proprietary-the contents in this service guide subject to change without prior notice.
Distribution, transmission, or infringement of any content or data from this document without Samsung's written authorization is strictly prohibited.

8-3-18. GSM850 / WCDMA B5 / LTE5 RX

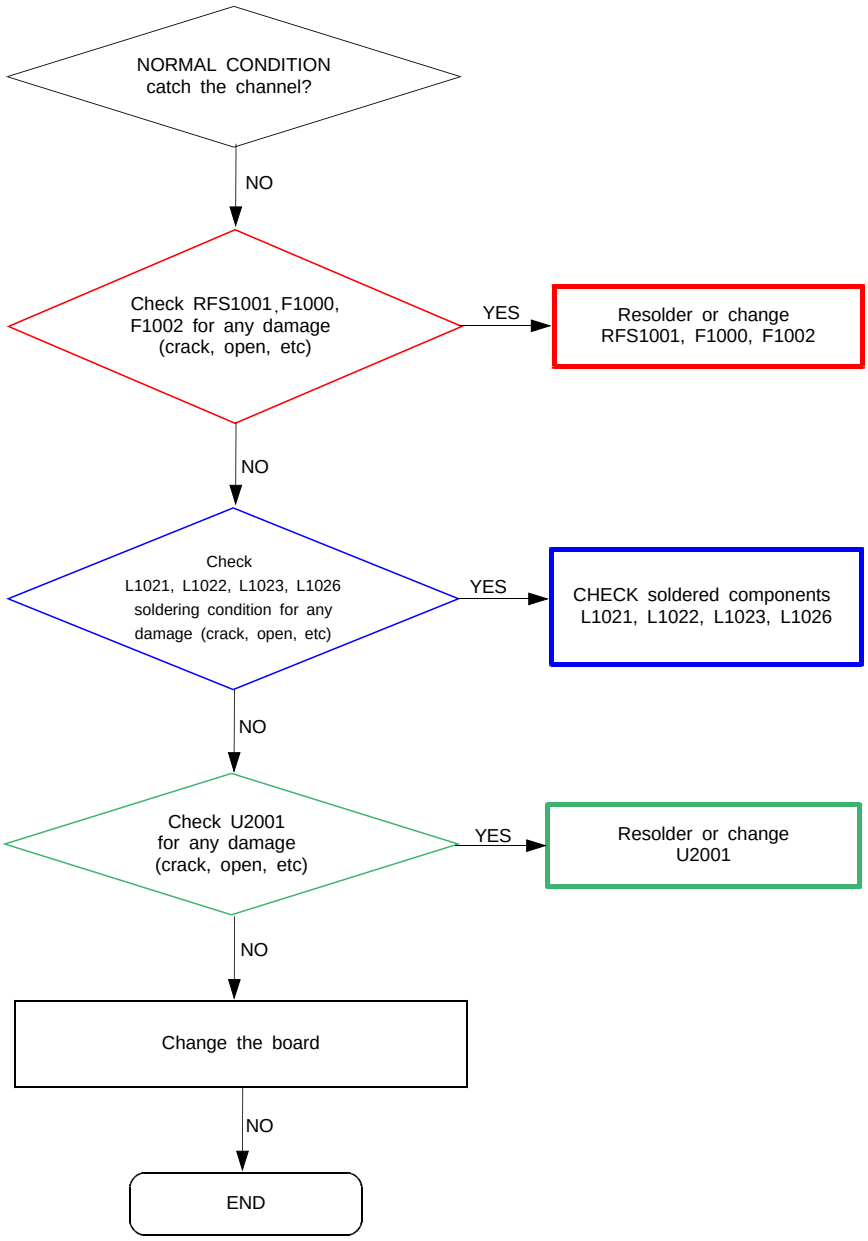

Confidential and proprietary-the contents in this service guide subject to change without prior notice.
Distribution, transmission, or infringement of any content or data from this document without Samsung's written authorization is strictly prohibited.

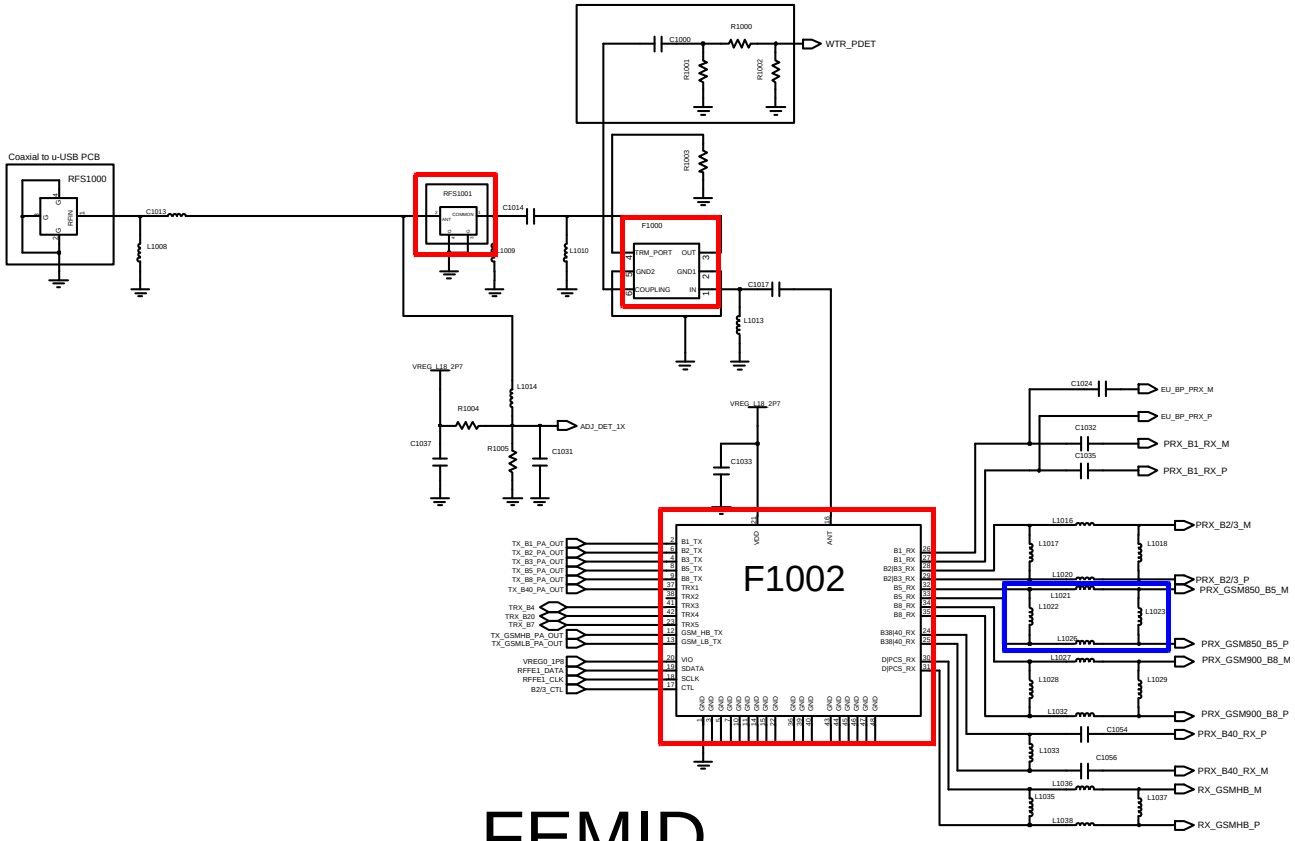

FEMID

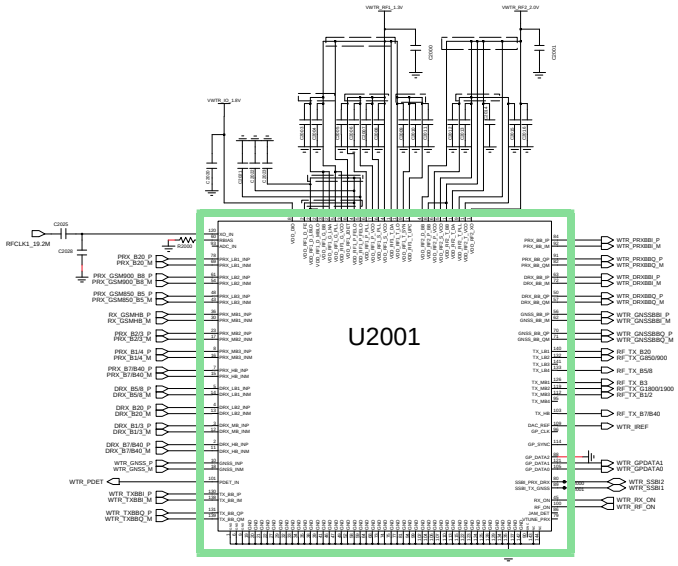

RF Transceiver

Confidential and proprietary-the contents in this service guide subject to change without prior notice.
Distribution, transmission, or infringement of any content or data from this document without Samsung's written authorization is strictly prohibited.

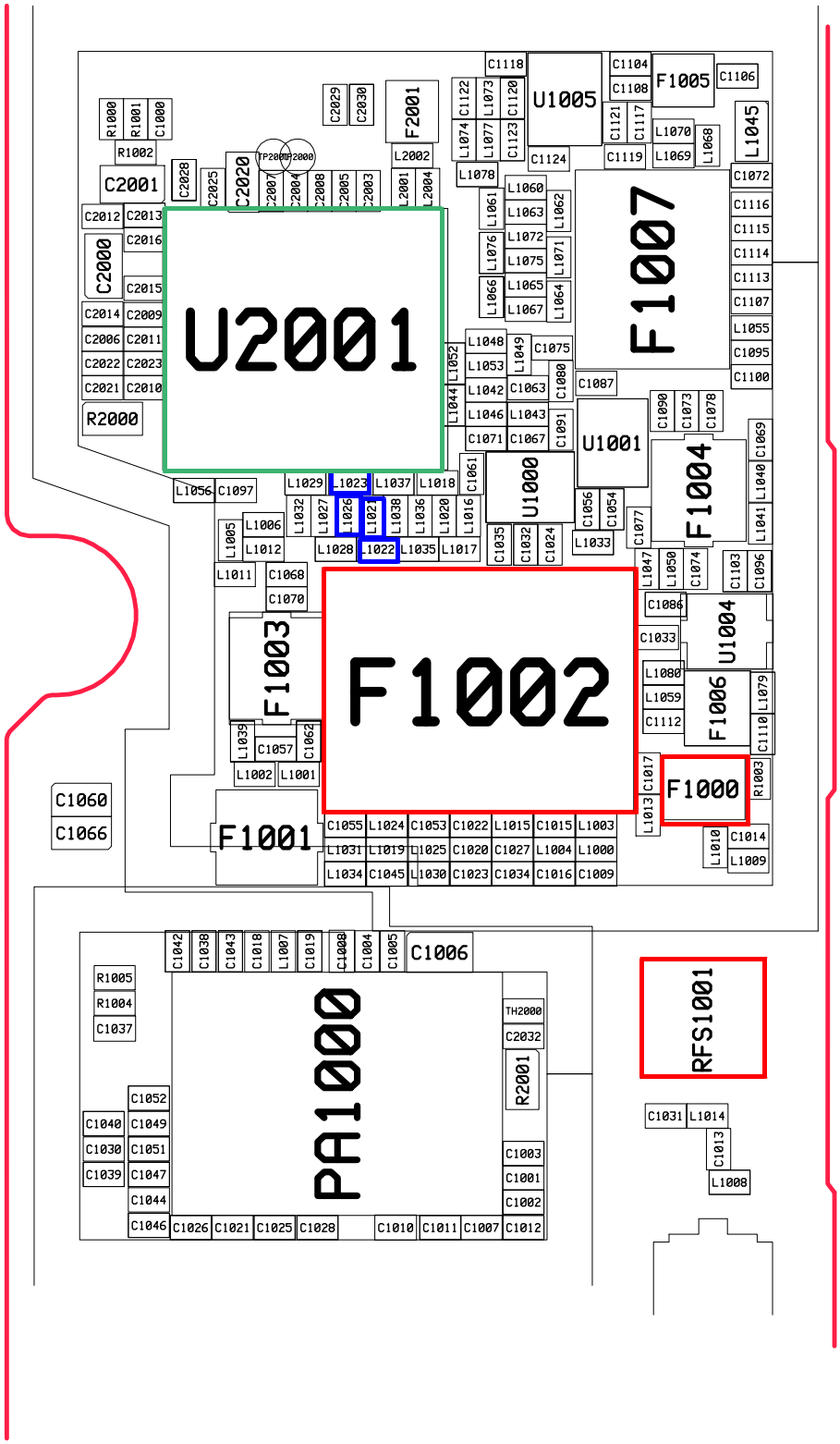

Confidential and proprietary-the contents in this service guide subject to change without prior notice.
Distribution, transmission, or infringement of any content or data from this document without Samsung's written authorization is strictly prohibited.

8-3-19. GSM900 / WCDMA B8 / LTE8 RX

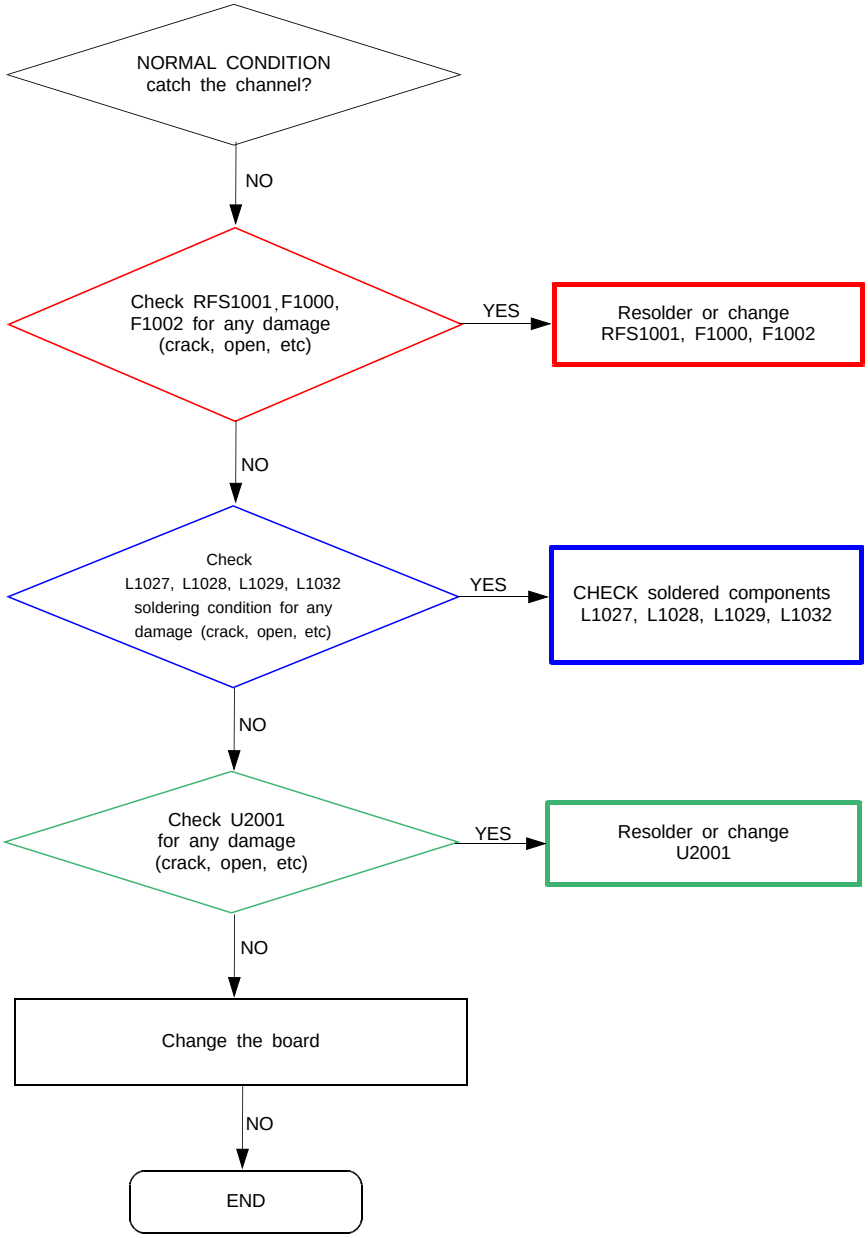

Confidential and proprietary-the contents in this service guide subject to change without prior notice.
Distribution, transmission, or infringement of any content or data from this document without Samsung's written authorization is strictly prohibited.

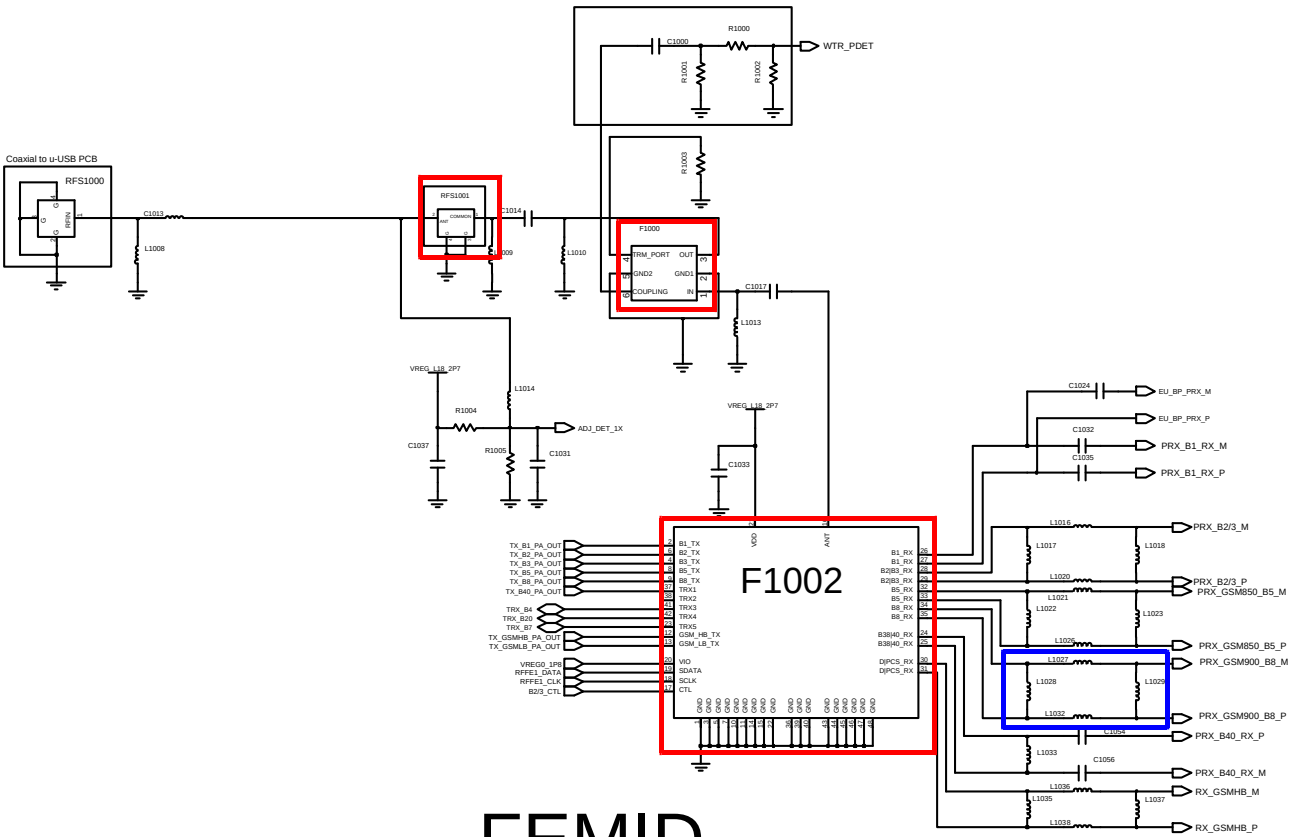

FEMID

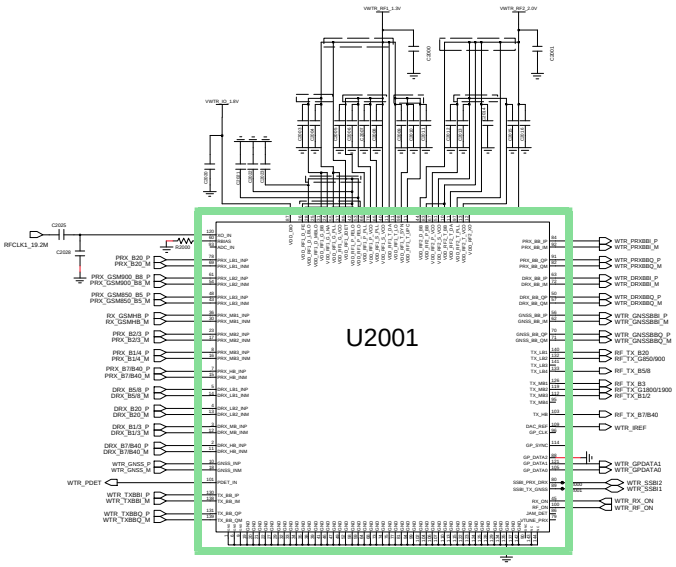

RF Transceiver

Confidential and proprietary-the contents in this service guide subject to change without prior notice.
Distribution, transmission, or infringement of any content or data from this document without Samsung's written authorization is strictly prohibited.

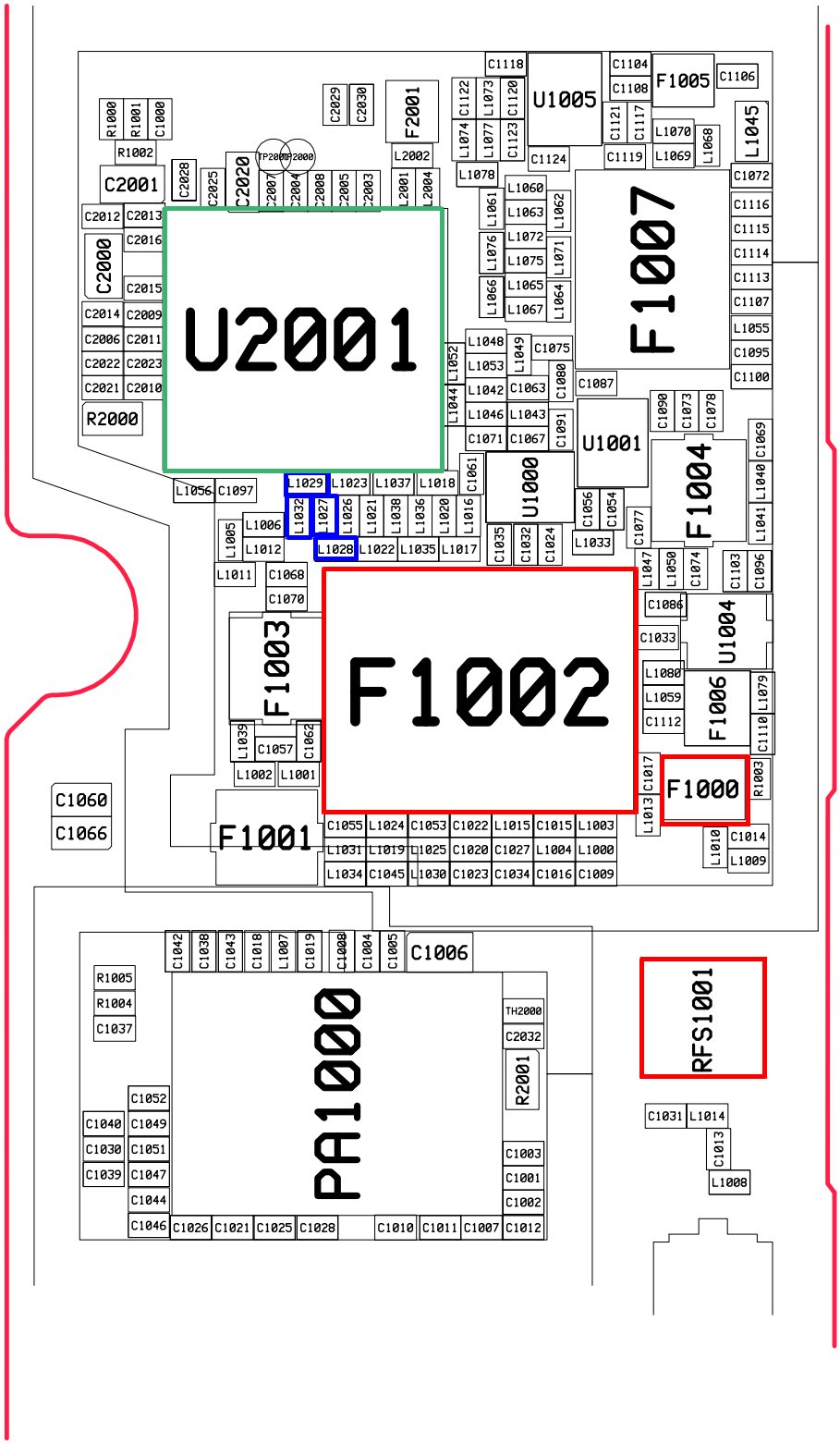

Confidential and proprietary-the contents in this service guide subject to change without prior notice.
Distribution, transmission, or infringement of any content or data from this document without Samsung's written authorization is strictly prohibited.

8-3-20. GSM1800 / GSM1900 RX

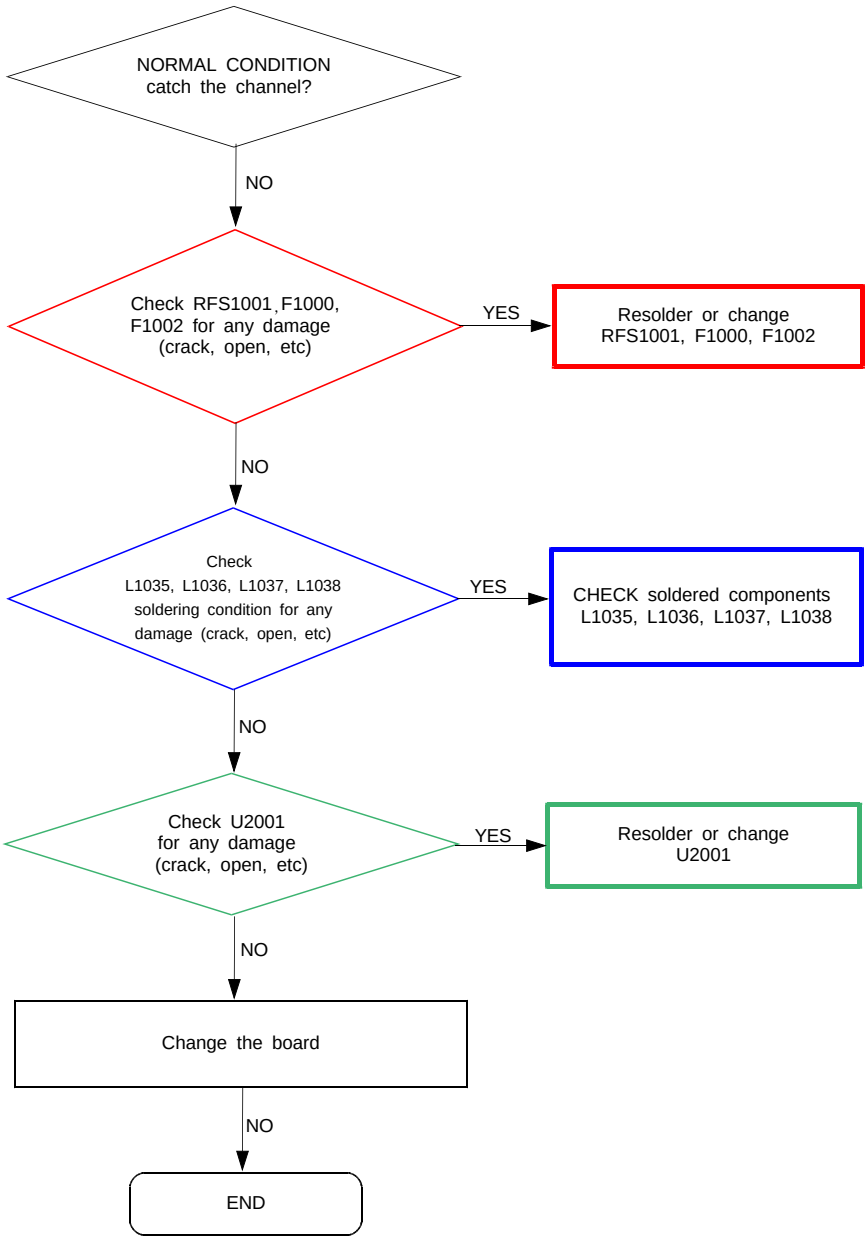

Confidential and proprietary-the contents in this service guide subject to change without prior notice.
Distribution, transmission, or infringement of any content or data from this document without Samsung's written authorization is strictly prohibited.

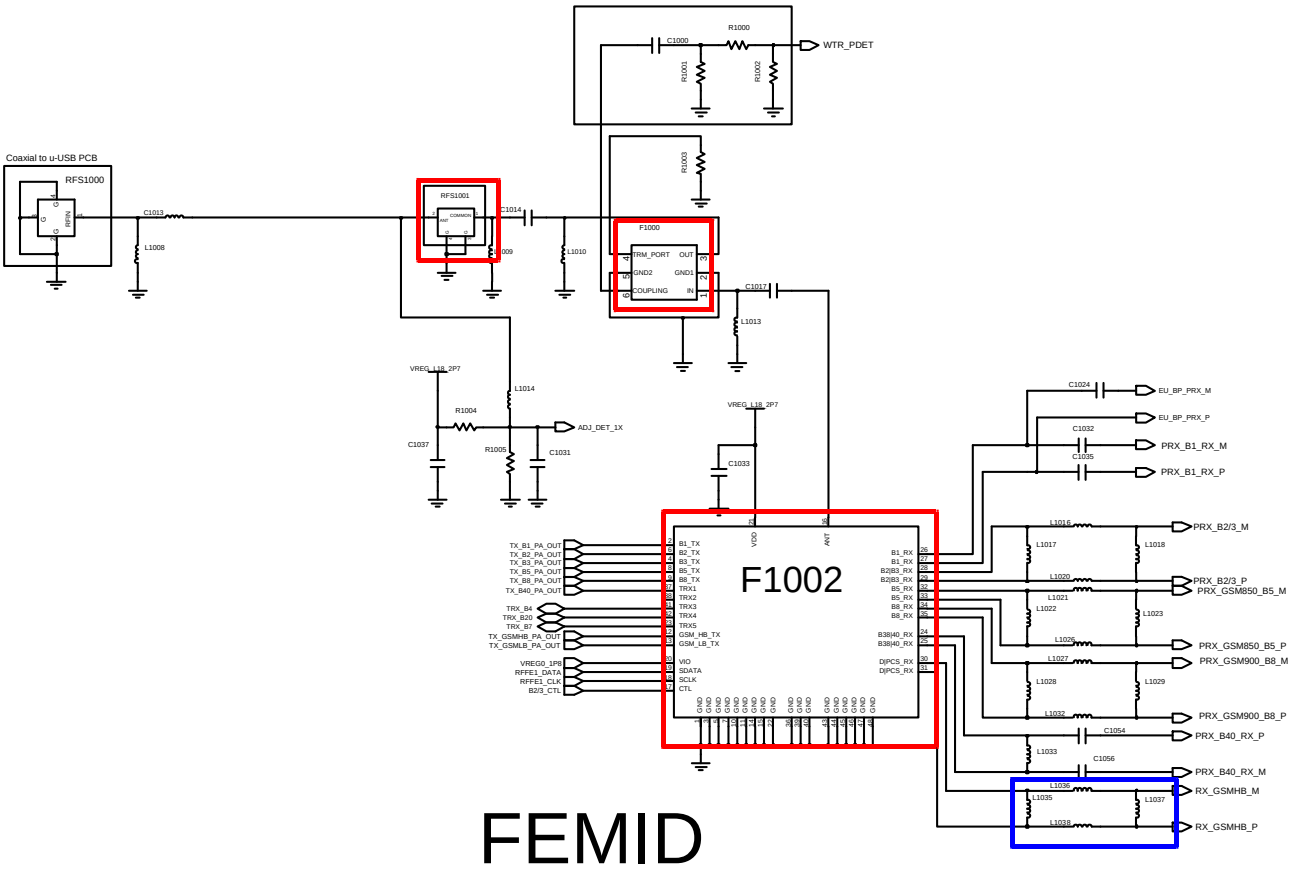

FEMID

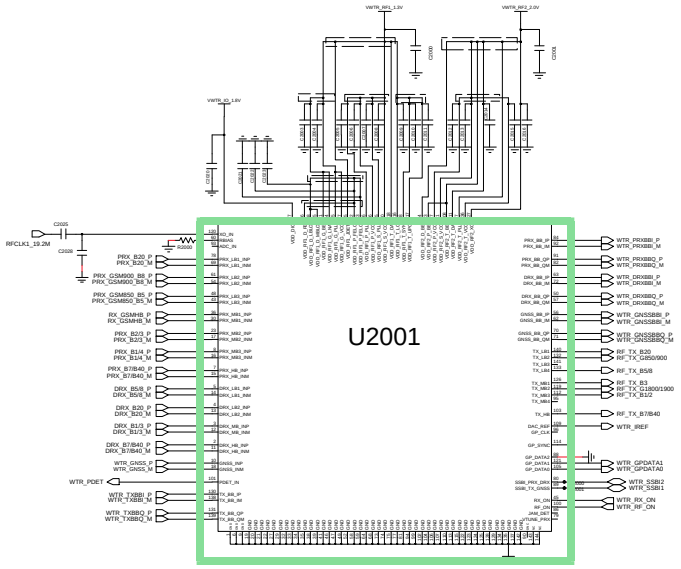

RF Transceiver

Confidential and proprietary-the contents in this service guide subject to change without prior notice.
Distribution, transmission, or infringement of any content or data from this document without Samsung's written authorization is strictly prohibited.

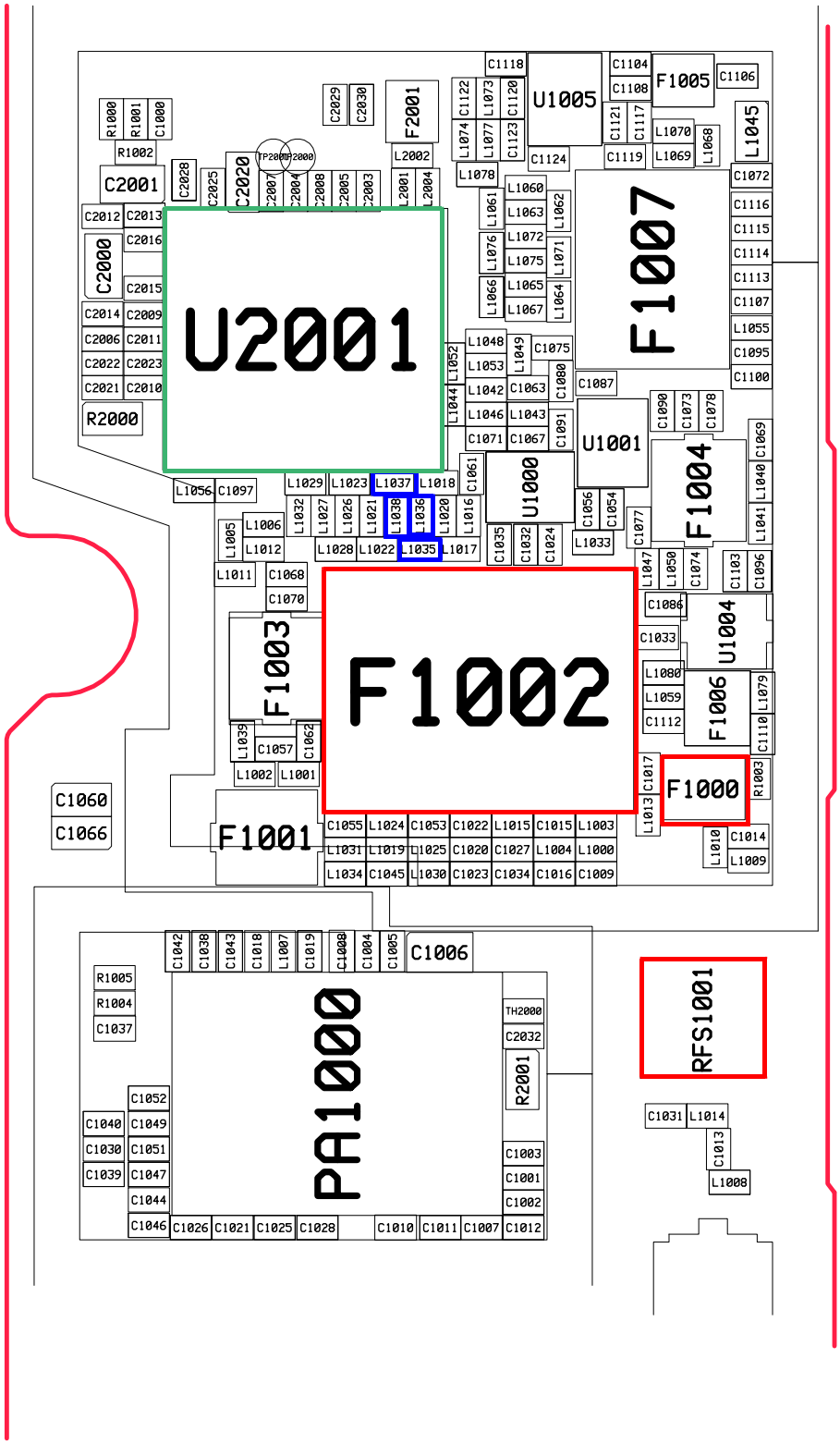

Confidential and proprietary-the contents in this service guide subject to change without prior notice.
Distribution, transmission, or infringement of any content or data from this document without Samsung's written authorization is strictly prohibited.

8-3-21. WCDMA B1 / LTE1 RX

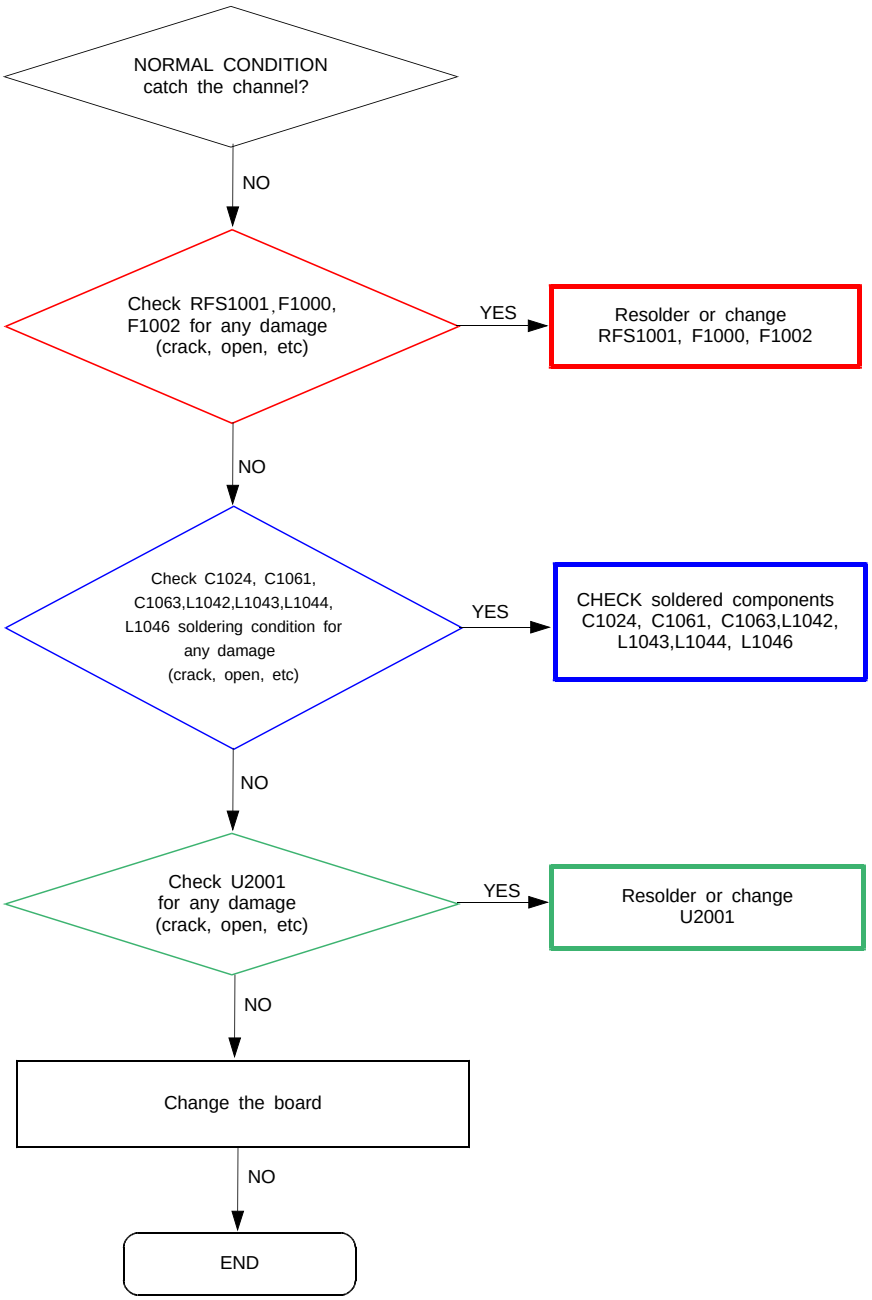

Confidential and proprietary-the contents in this service guide subject to change without prior notice.
Distribution, transmission, or infringement of any content or data from this document without Samsung's written authorization is strictly prohibited.

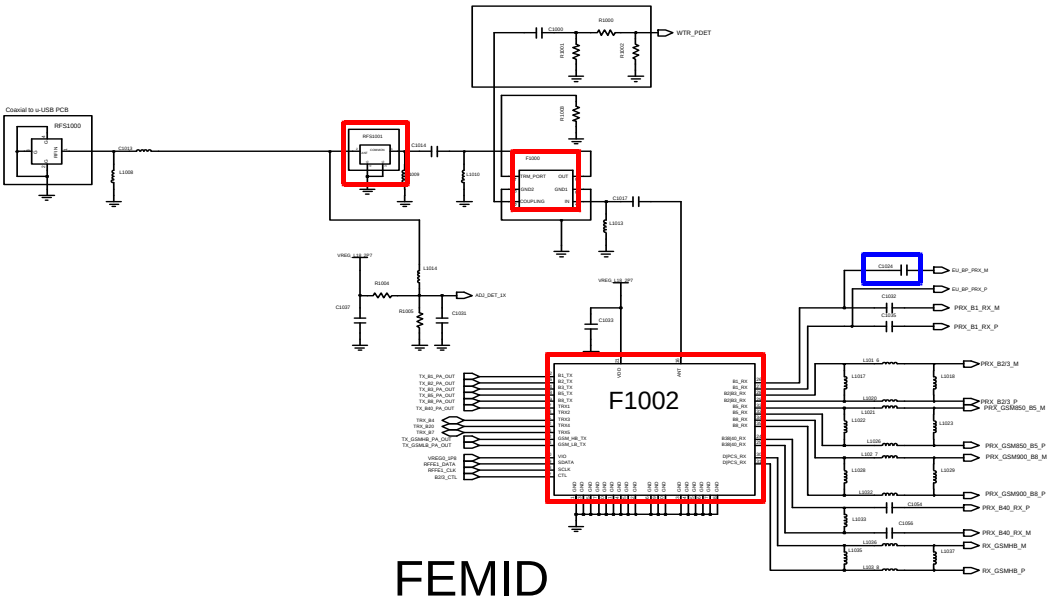

FEMID

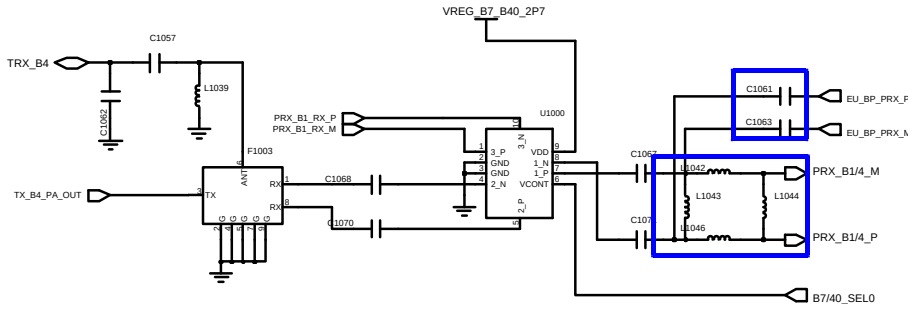

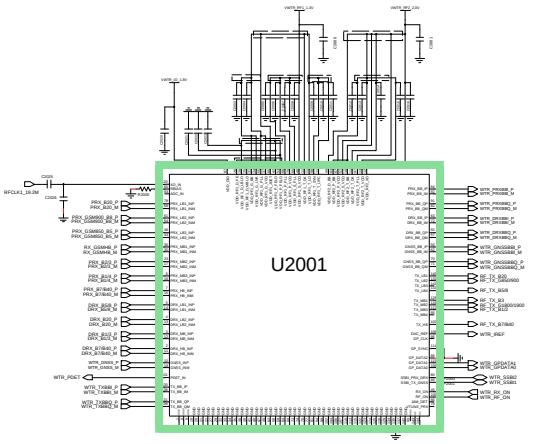

RF Transceiver

Confidential and proprietary-the contents in this service guide subject to change without prior notice.
Distribution, transmission, or infringement of any content or data from this document without Samsung's written authorization is strictly prohibited.

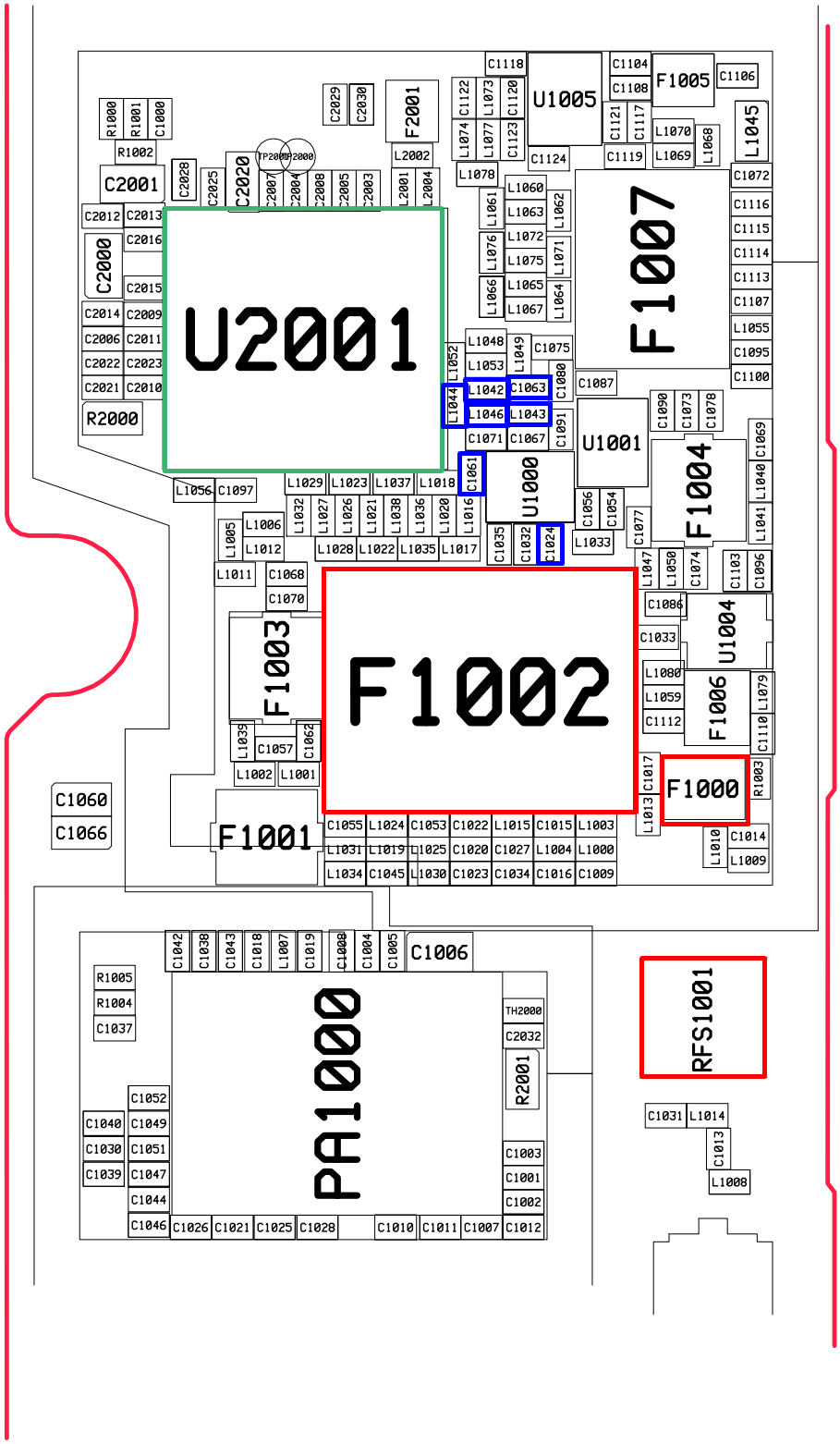

Confidential and proprietary-the contents in this service guide subject to change without prior notice.
Distribution, transmission, or infringement of any content or data from this document without Samsung's written authorization is strictly prohibited.

8-3-22. WCDMA B2 / LTE3 RX

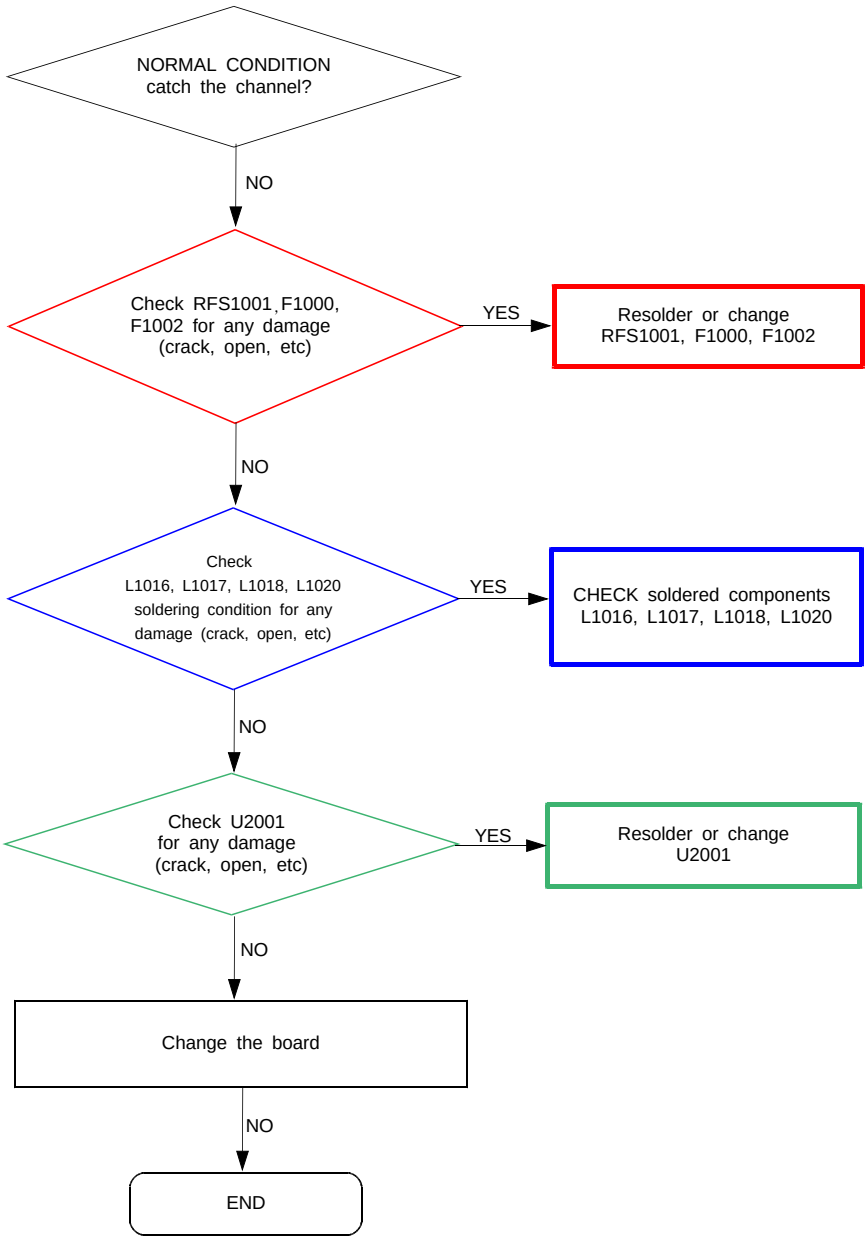

Confidential and proprietary-the contents in this service guide subject to change without prior notice.
Distribution, transmission, or infringement of any content or data from this document without Samsung's written authorization is strictly prohibited.

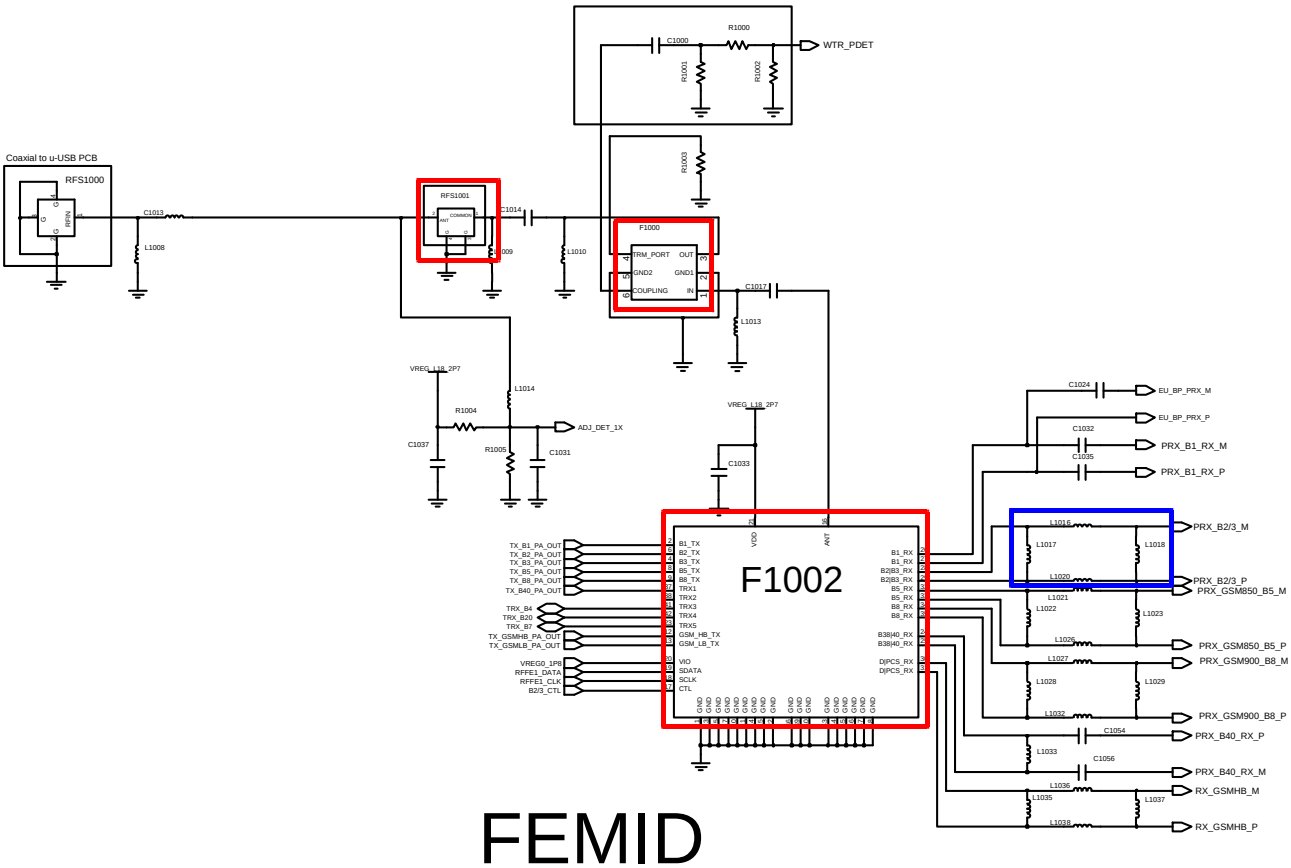

FEMID

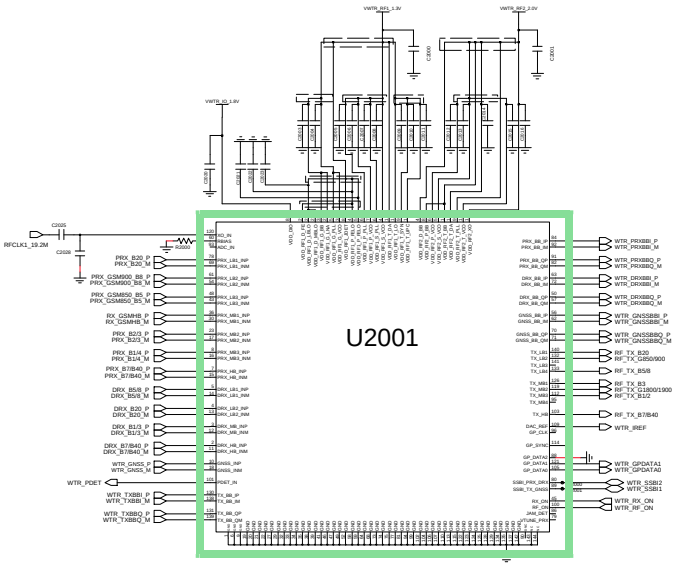

RF Transceiver

Confidential and proprietary-the contents in this service guide subject to change without prior notice.
Distribution, transmission, or infringement of any content or data from this document without Samsung's written authorization is strictly prohibited.

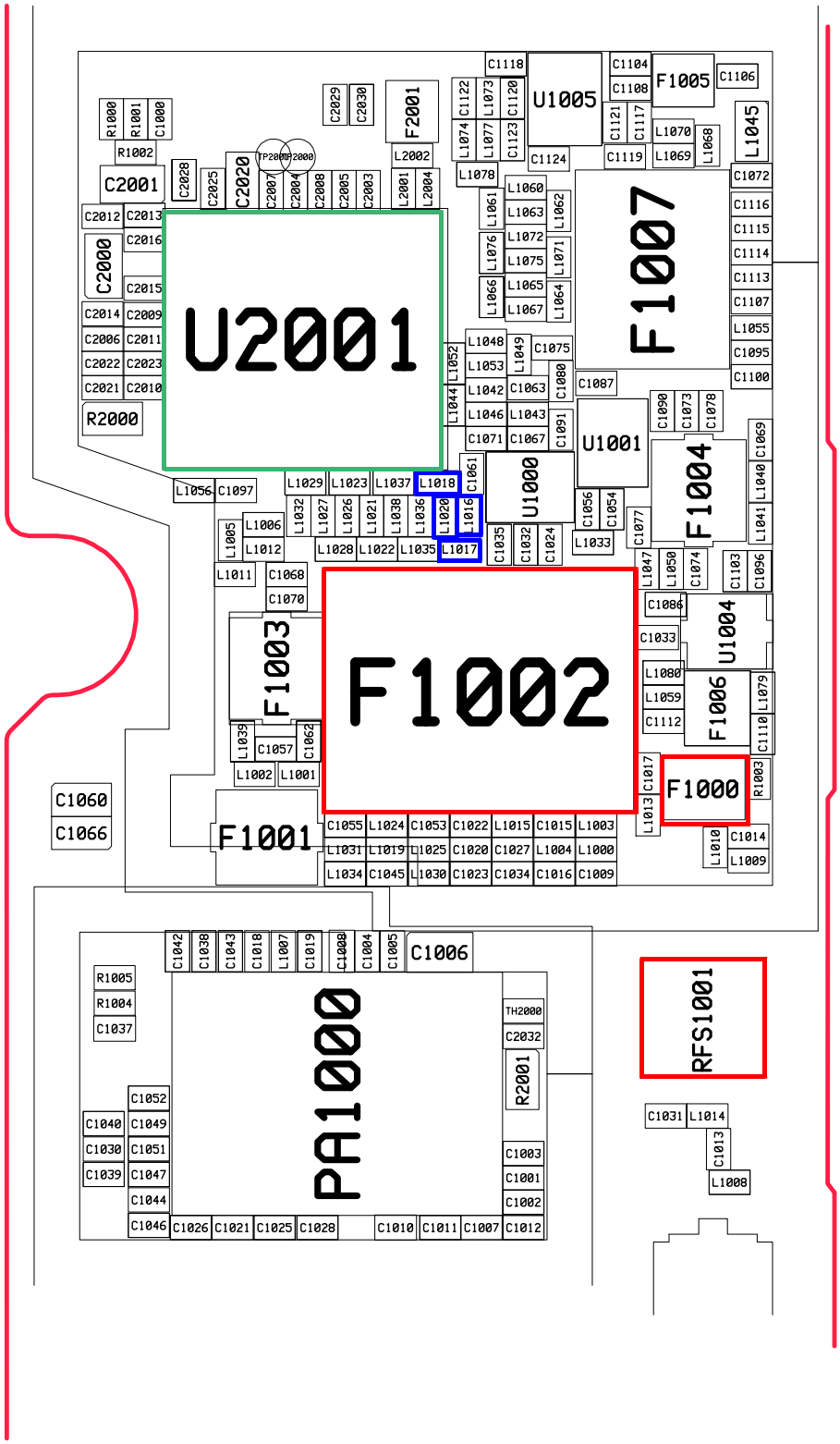

Confidential and proprietary-the contents in this service guide subject to change without prior notice.
Distribution, transmission, or infringement of any content or data from this document without Samsung's written authorization is strictly prohibited.

8-3-23. LTE7 RX

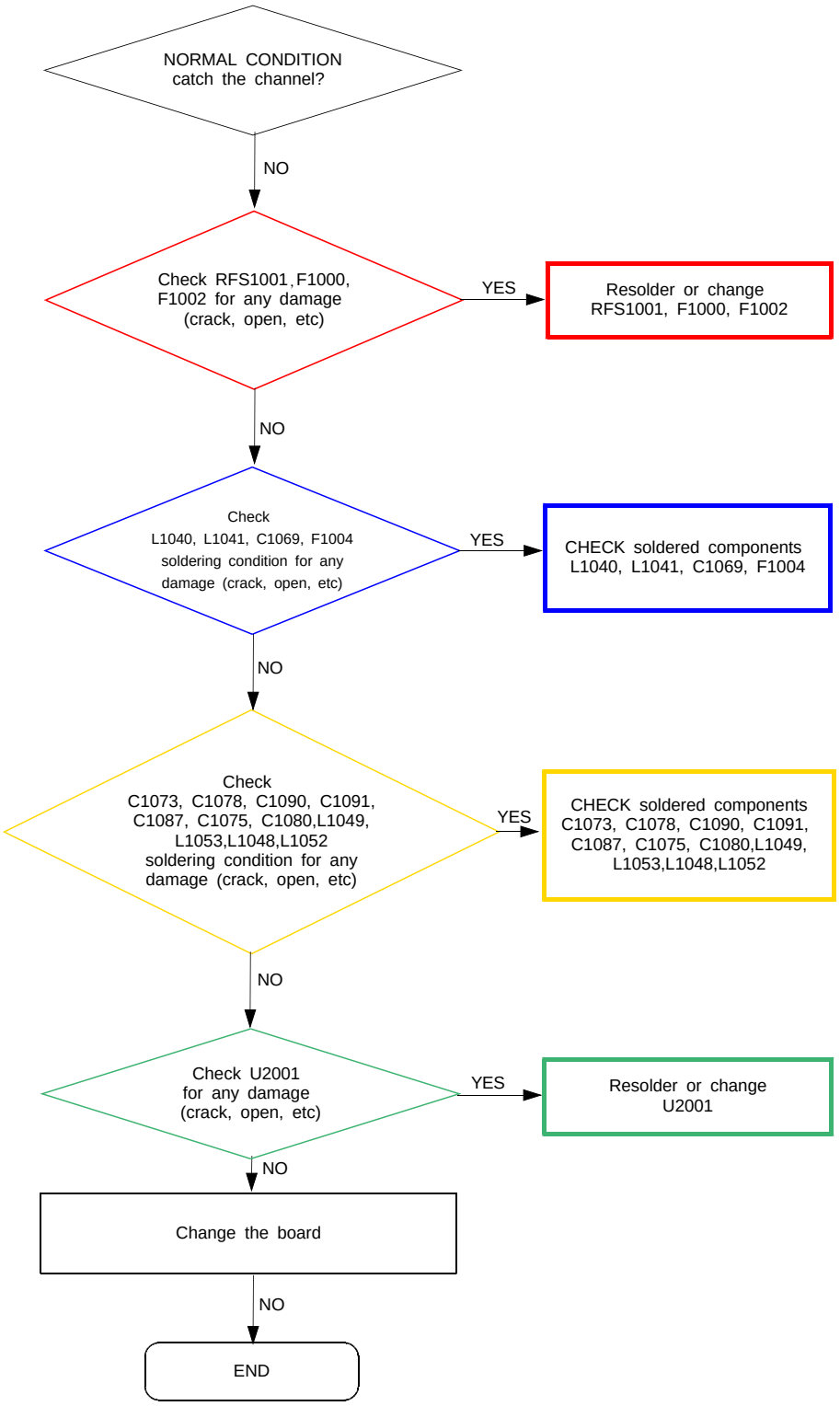

Confidential and proprietary-the contents in this service guide subject to change without prior notice.
Distribution, transmission, or infringement of any content or data from this document without Samsung's written authorization is strictly prohibited.

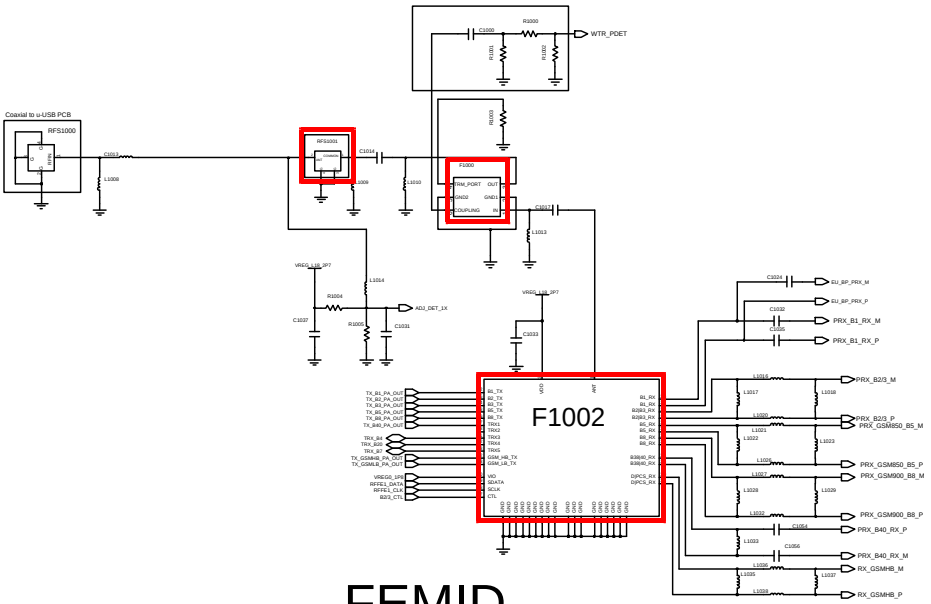

FEMID

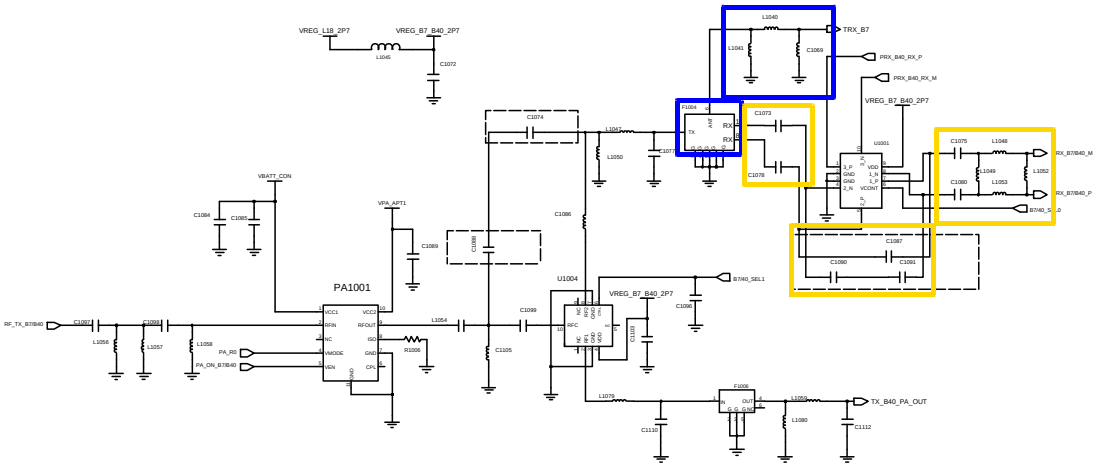

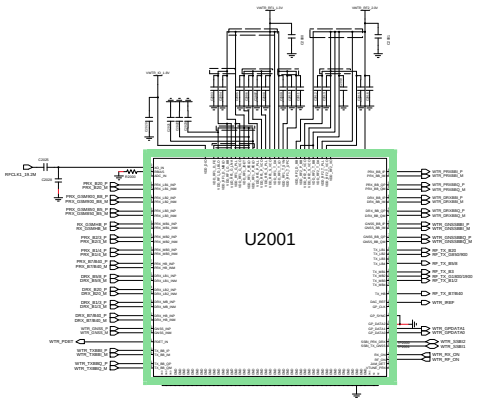

RF Transceiver

Confidential and proprietary-the contents in this service guide subject to change without prior notice.
Distribution, transmission, or infringement of any content or data from this document without Samsung's written authorization is strictly prohibited.

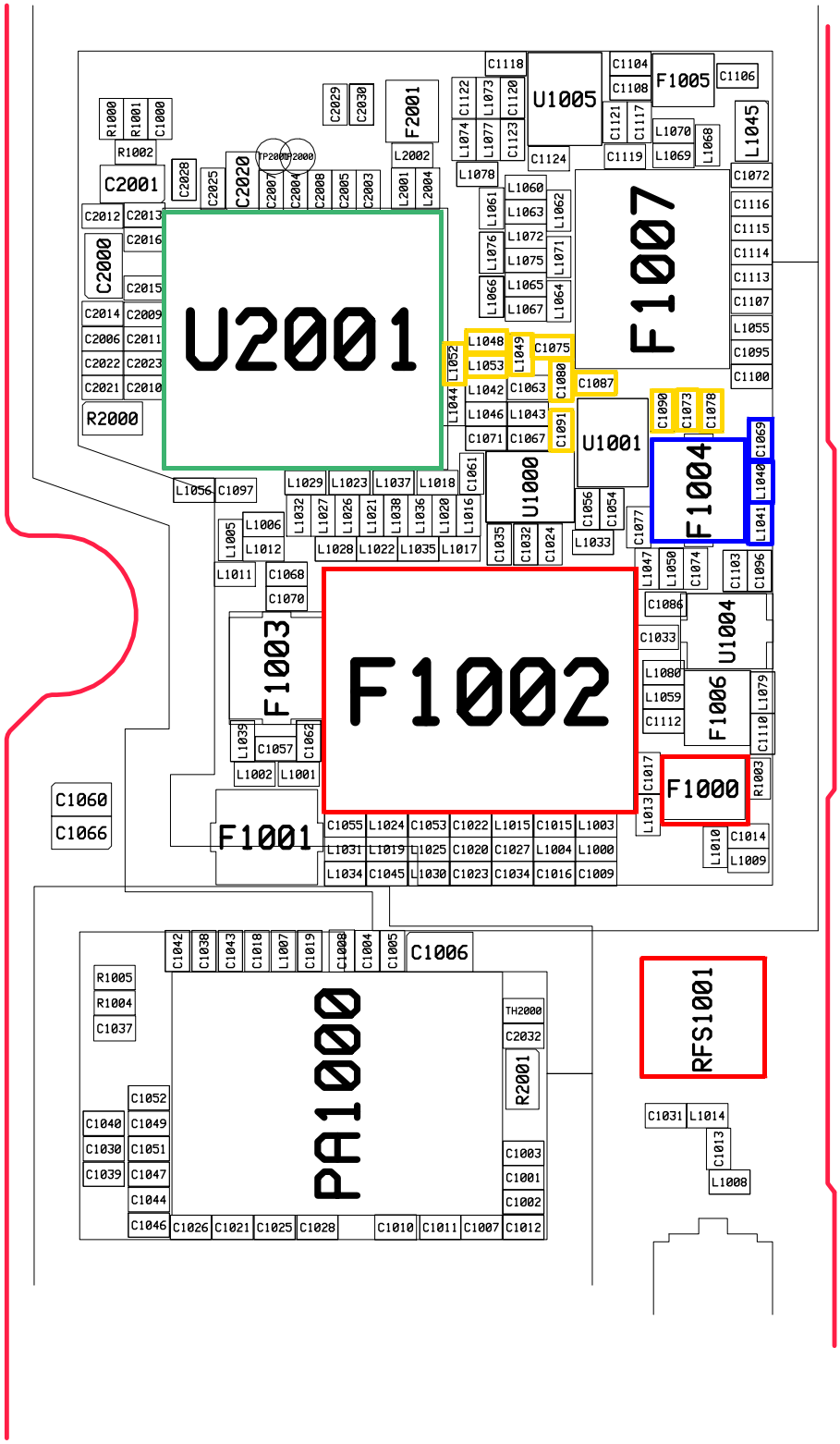

Confidential and proprietary-the contents in this service guide subject to change without prior notice.
Distribution, transmission, or infringement of any content or data from this document without Samsung's written authorization is strictly prohibited.

8-3-24. LTE20 RX

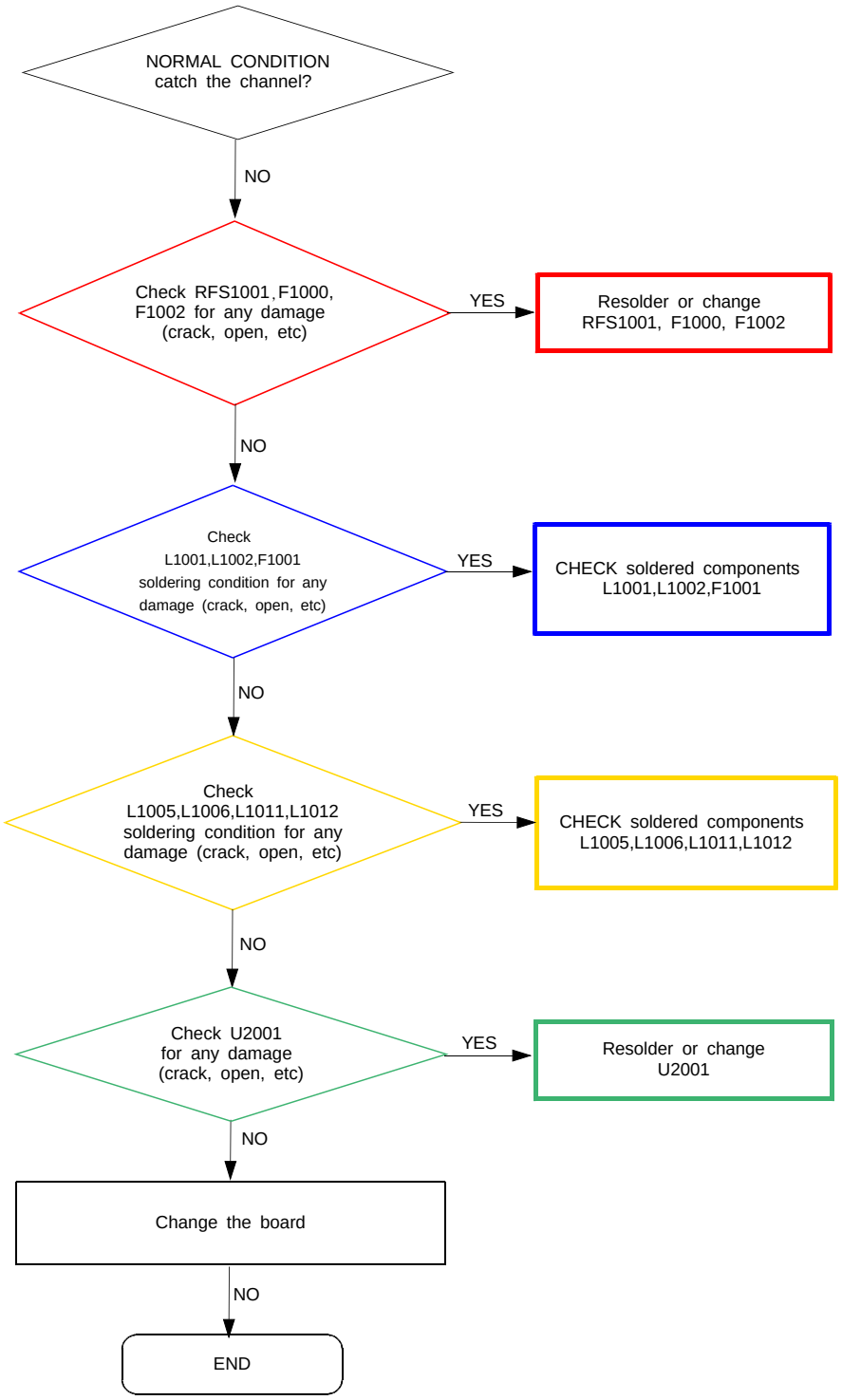

Confidential and proprietary-the contents in this service guide subject to change without prior notice.
Distribution, transmission, or infringement of any content or data from this document without Samsung's written authorization is strictly prohibited.

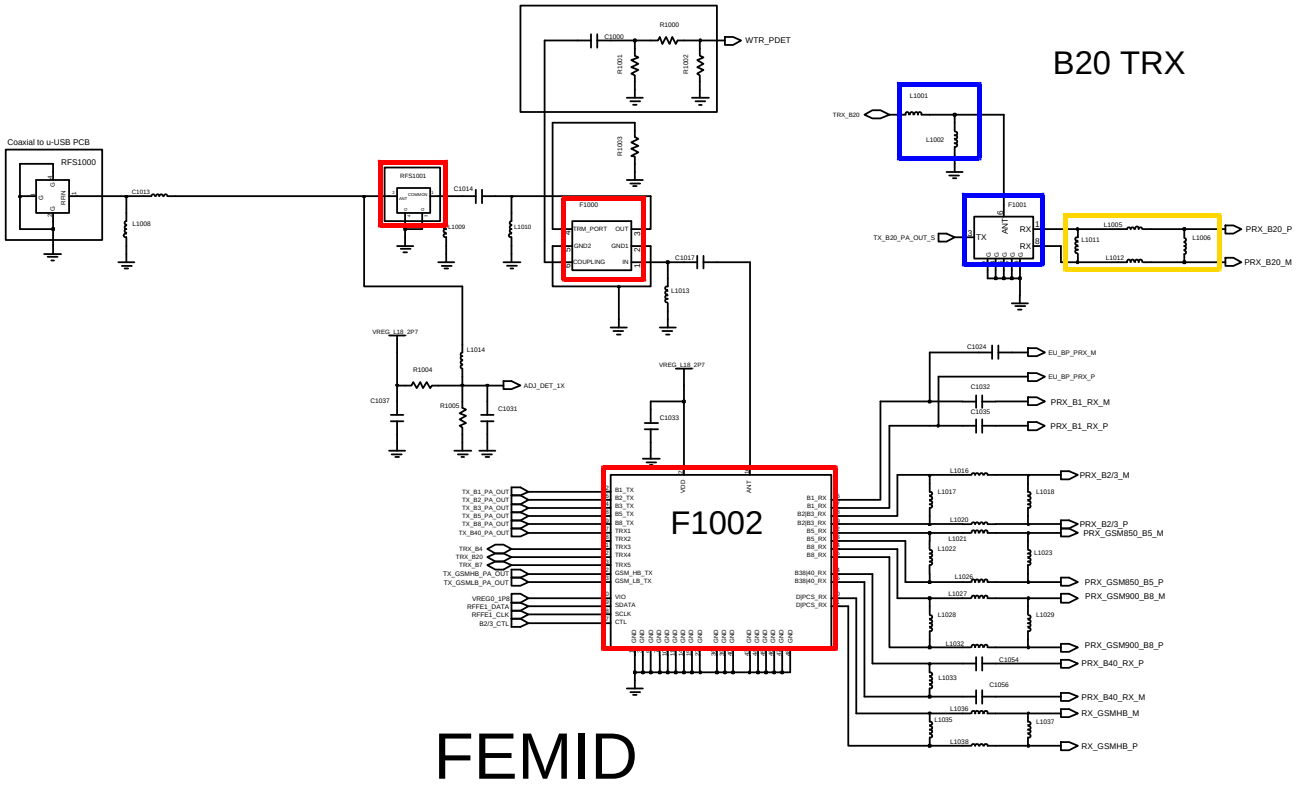

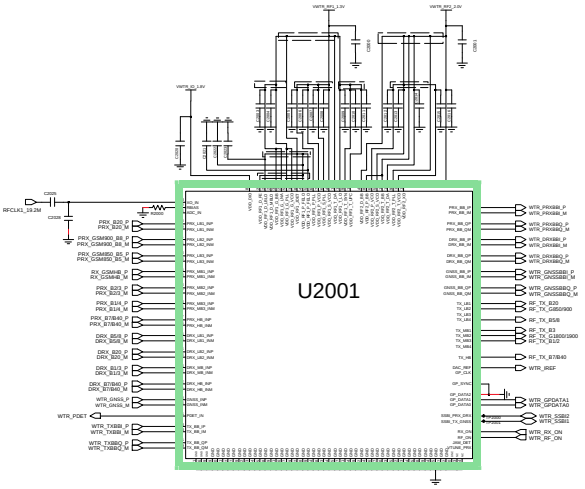

Confidential and proprietary-the contents in this service guide subject to change without prior notice.
Distribution, transmission, or infringement of any content or data from this document without Samsung's written authorization is strictly prohibited.

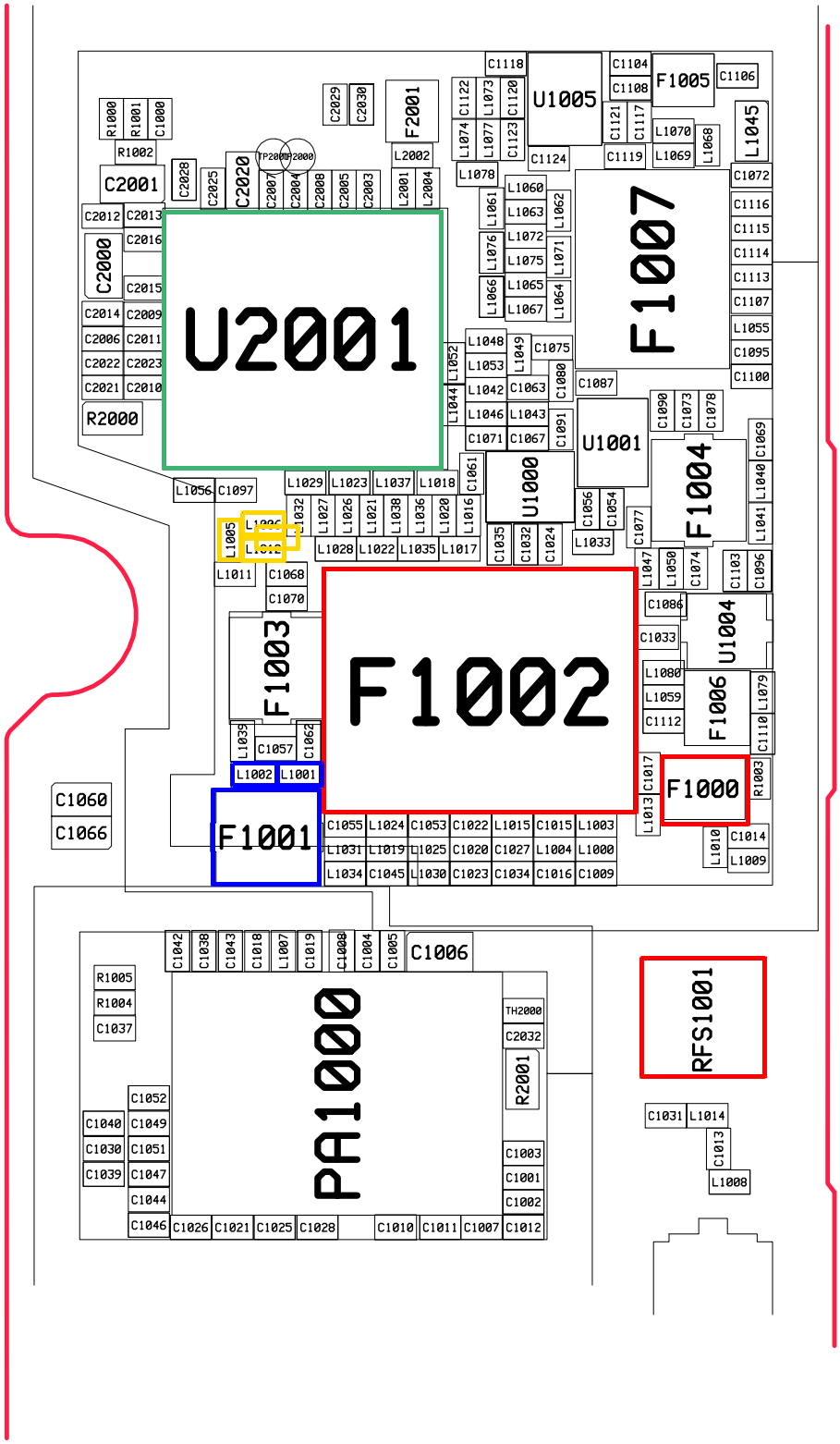

Confidential and proprietary-the contents in this service guide subject to change without prior notice.
Distribution, transmission, or infringement of any content or data from this document without Samsung's written authorization is strictly prohibited.

8-3-25. GSM850 / GSM900 TX

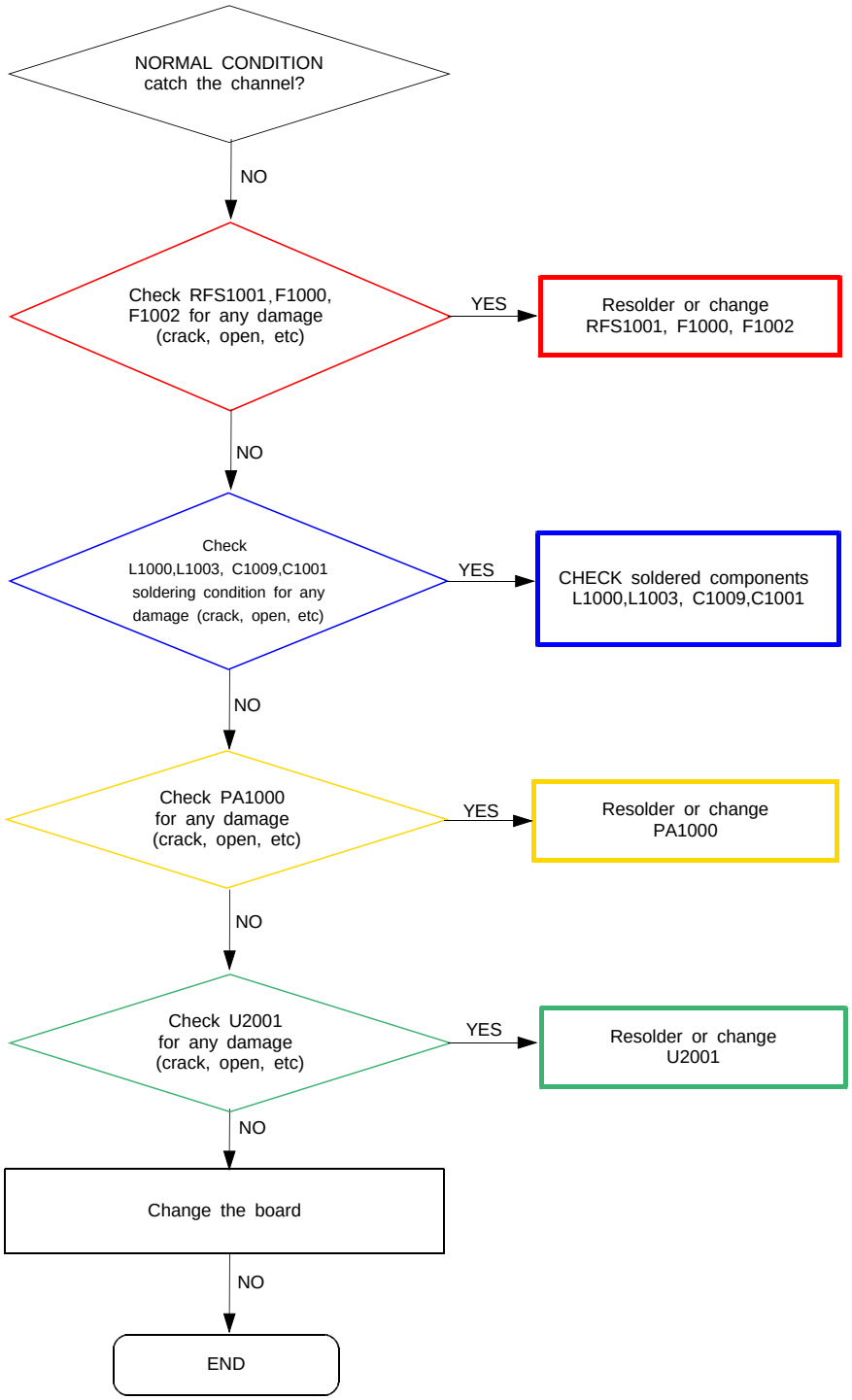

Confidential and proprietary-the contents in this service guide subject to change without prior notice.
Distribution, transmission, or infringement of any content or data from this document without Samsung's written authorization is strictly prohibited.

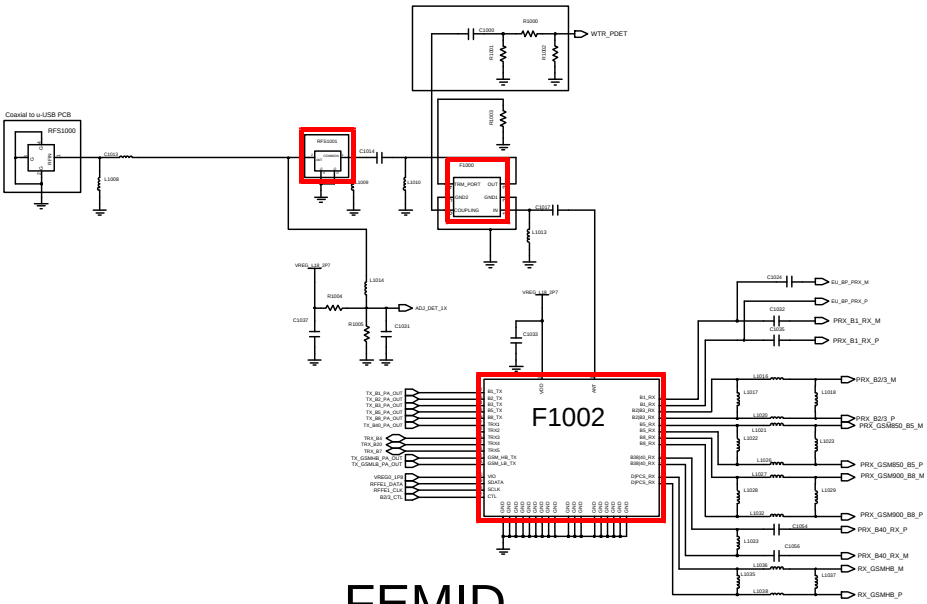

FEMID

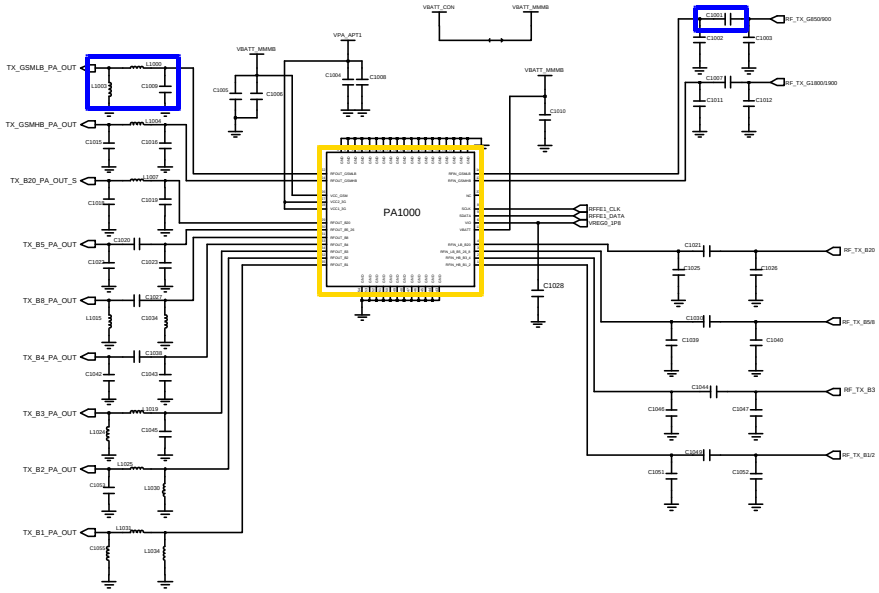

BAND1/2/3/5/8/20, GSM QUAD MMMB PA

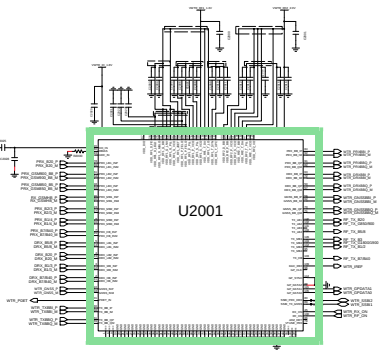

RF Transceiver

Confidential and proprietary-the contents in this service guide subject to change without prior notice.
Distribution, transmission, or infringement of any content or data from this document without Samsung's written authorization is strictly prohibited.

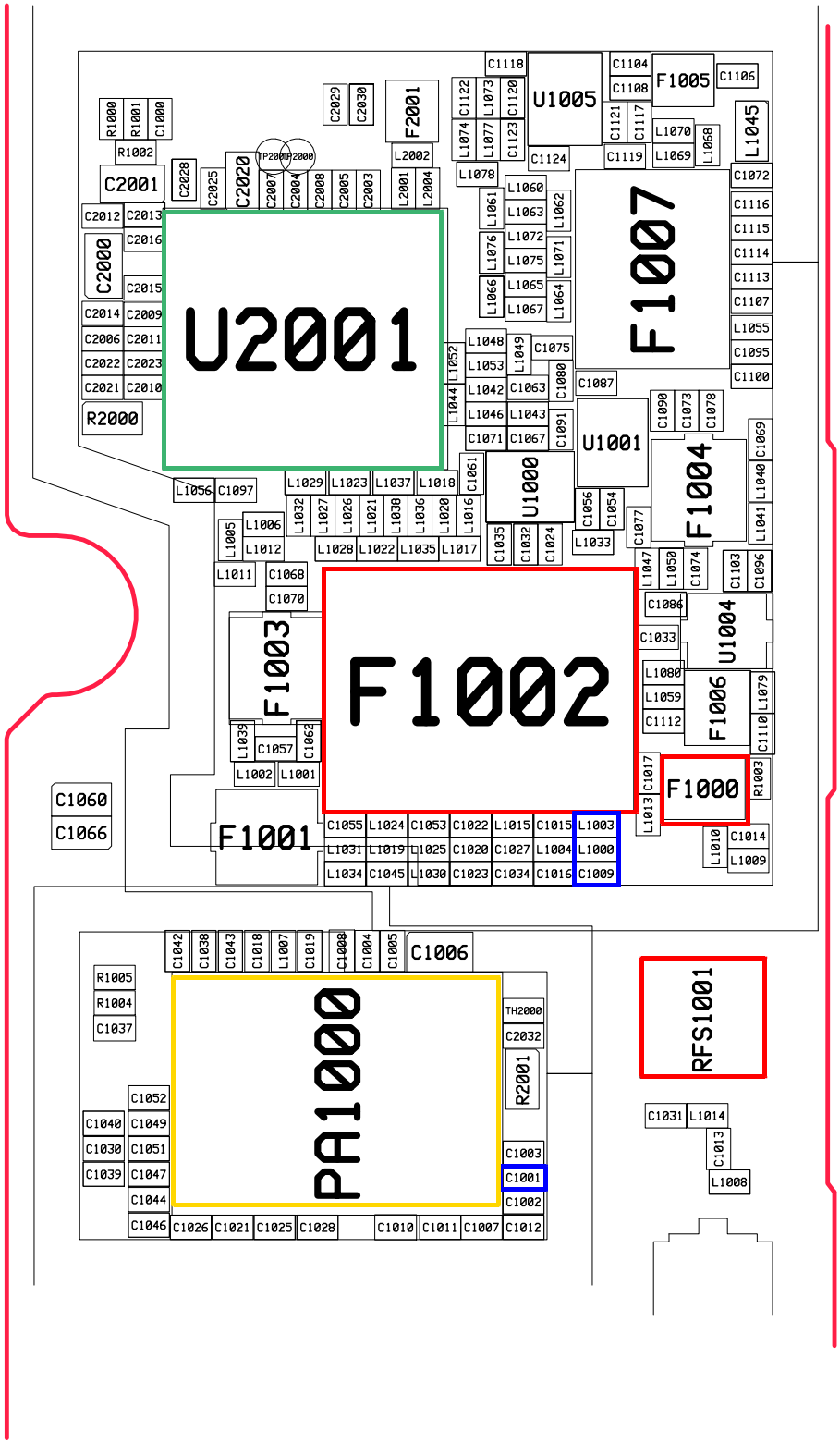

Confidential and proprietary-the contents in this service guide subject to change without prior notice.
Distribution, transmission, or infringement of any content or data from this document without Samsung's written authorization is strictly prohibited.

8-3-26. GSM1800 / GSM1900 TX

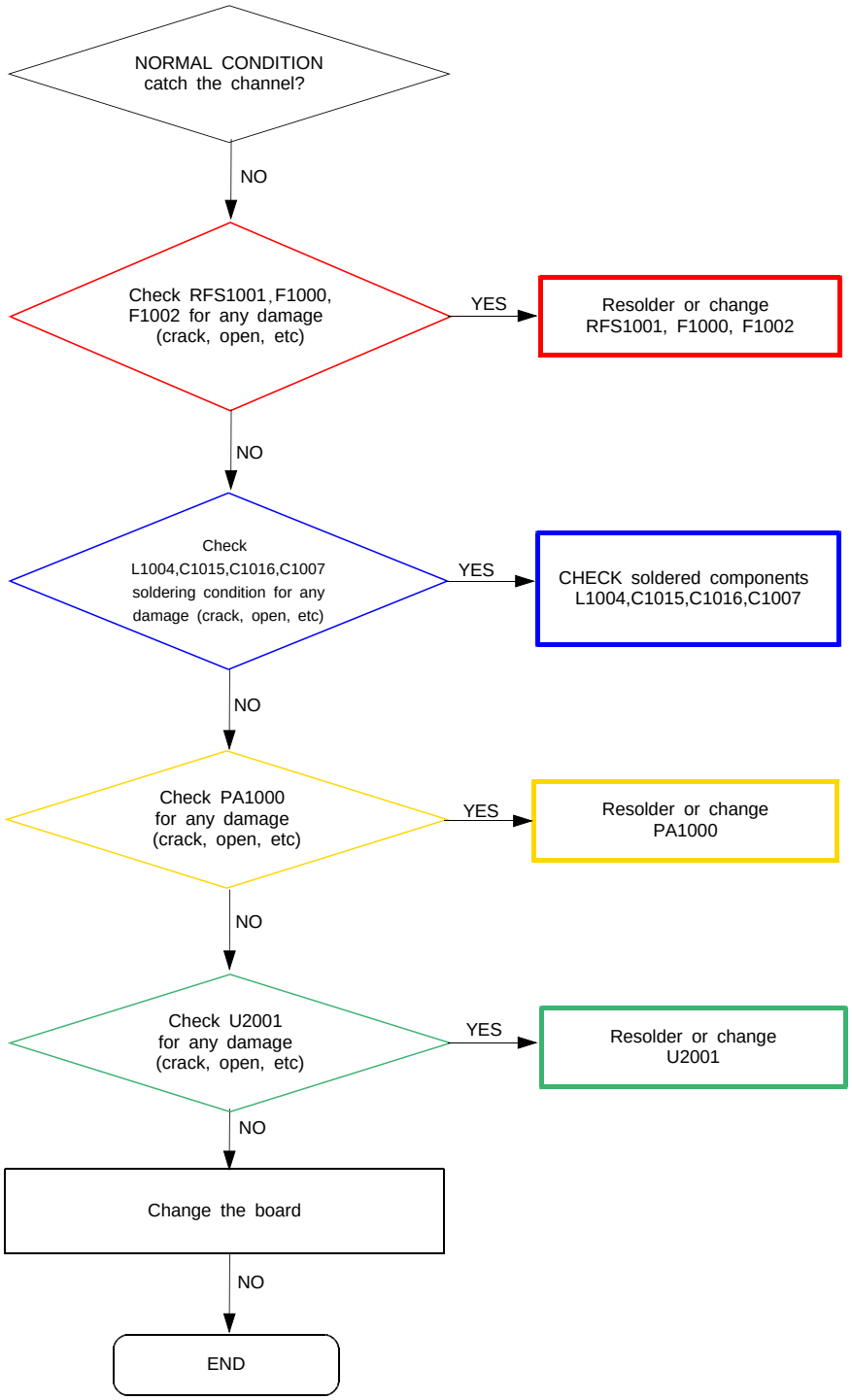

Confidential and proprietary-the contents in this service guide subject to change without prior notice.
Distribution, transmission, or infringement of any content or data from this document without Samsung's written authorization is strictly prohibited.

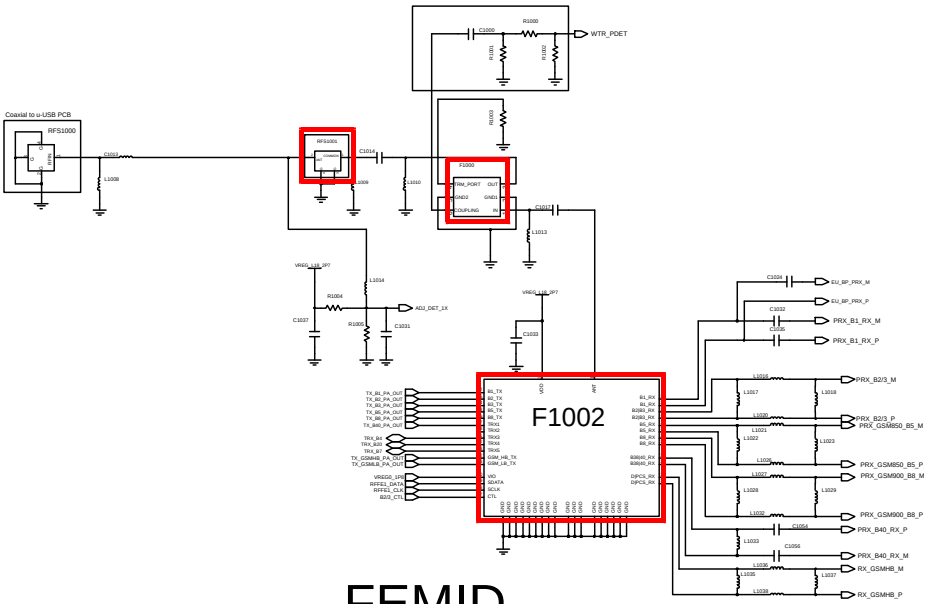

FEMID

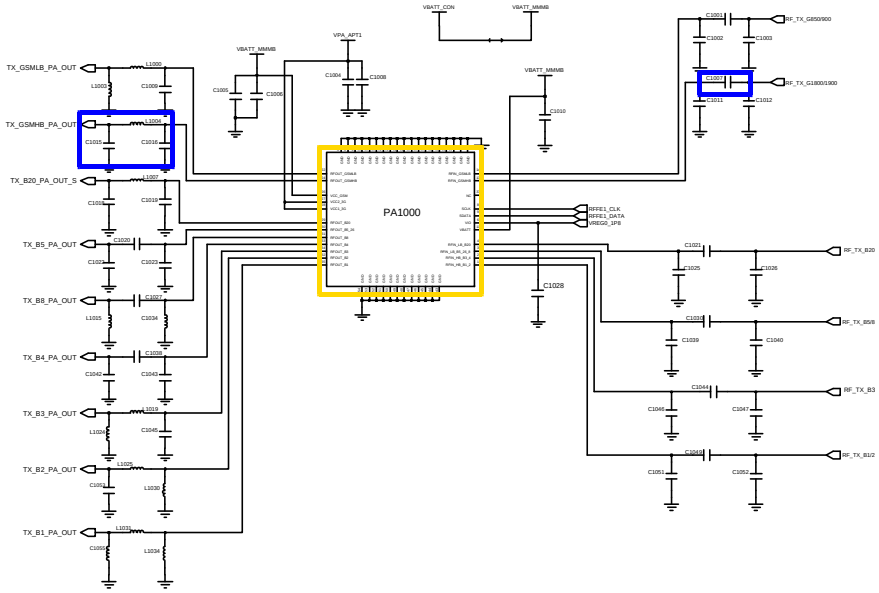

BAND1/2/3/5/8/20, GSM QUAD MMMB PA

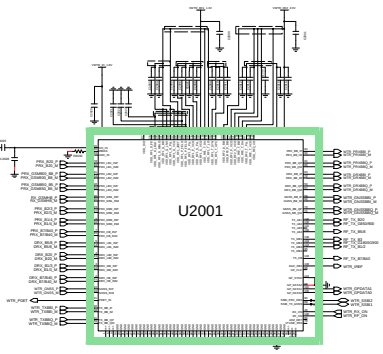

RF Transceiver

Confidential and proprietary-the contents in this service guide subject to change without prior notice.
Distribution, transmission, or infringement of any content or data from this document without Samsung's written authorization is strictly prohibited.

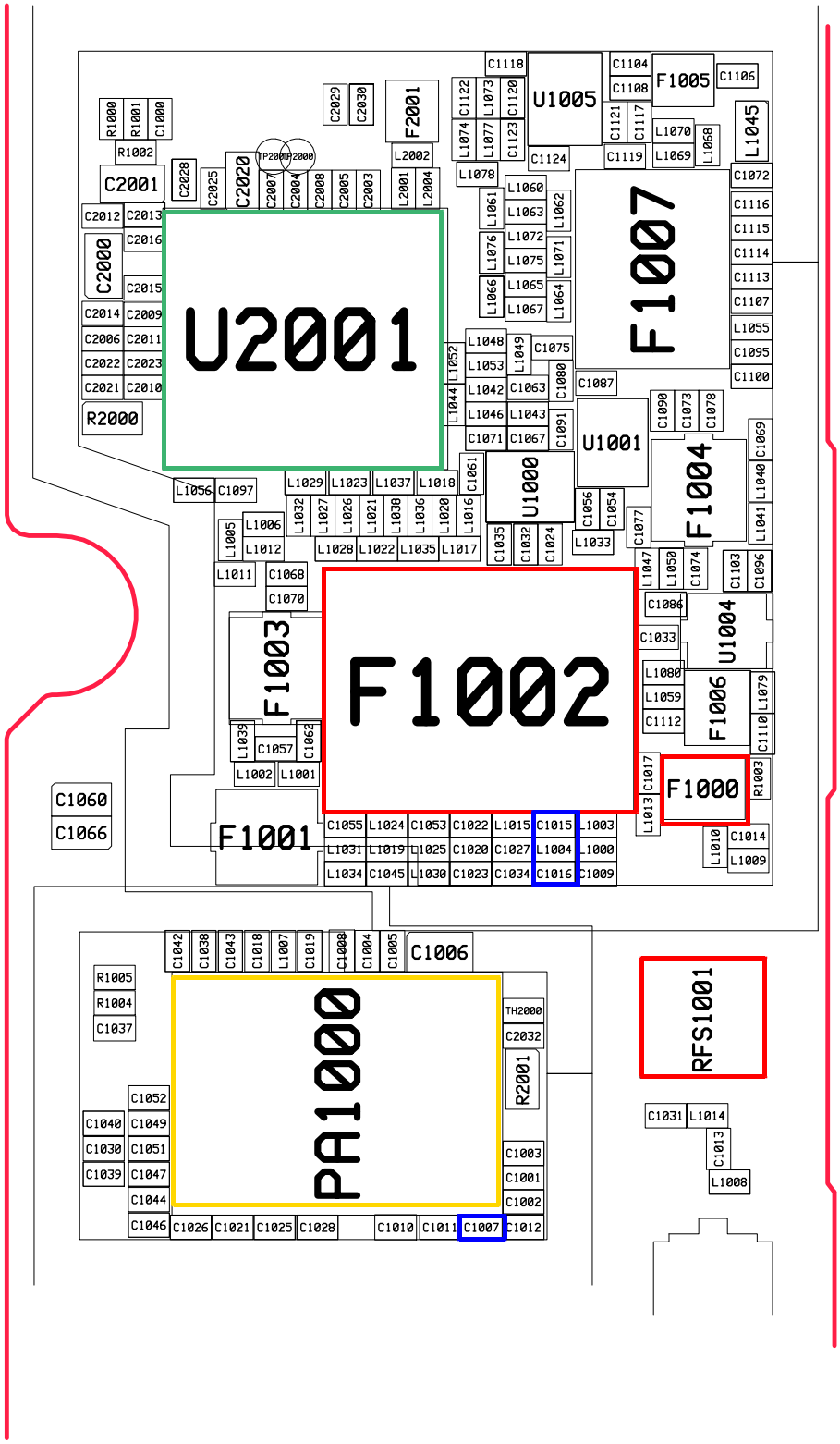

Confidential and proprietary-the contents in this service guide subject to change without prior notice.
Distribution, transmission, or infringement of any content or data from this document without Samsung's written authorization is strictly prohibited.

8-3-27. WCDMA B1 / LTE1 TX

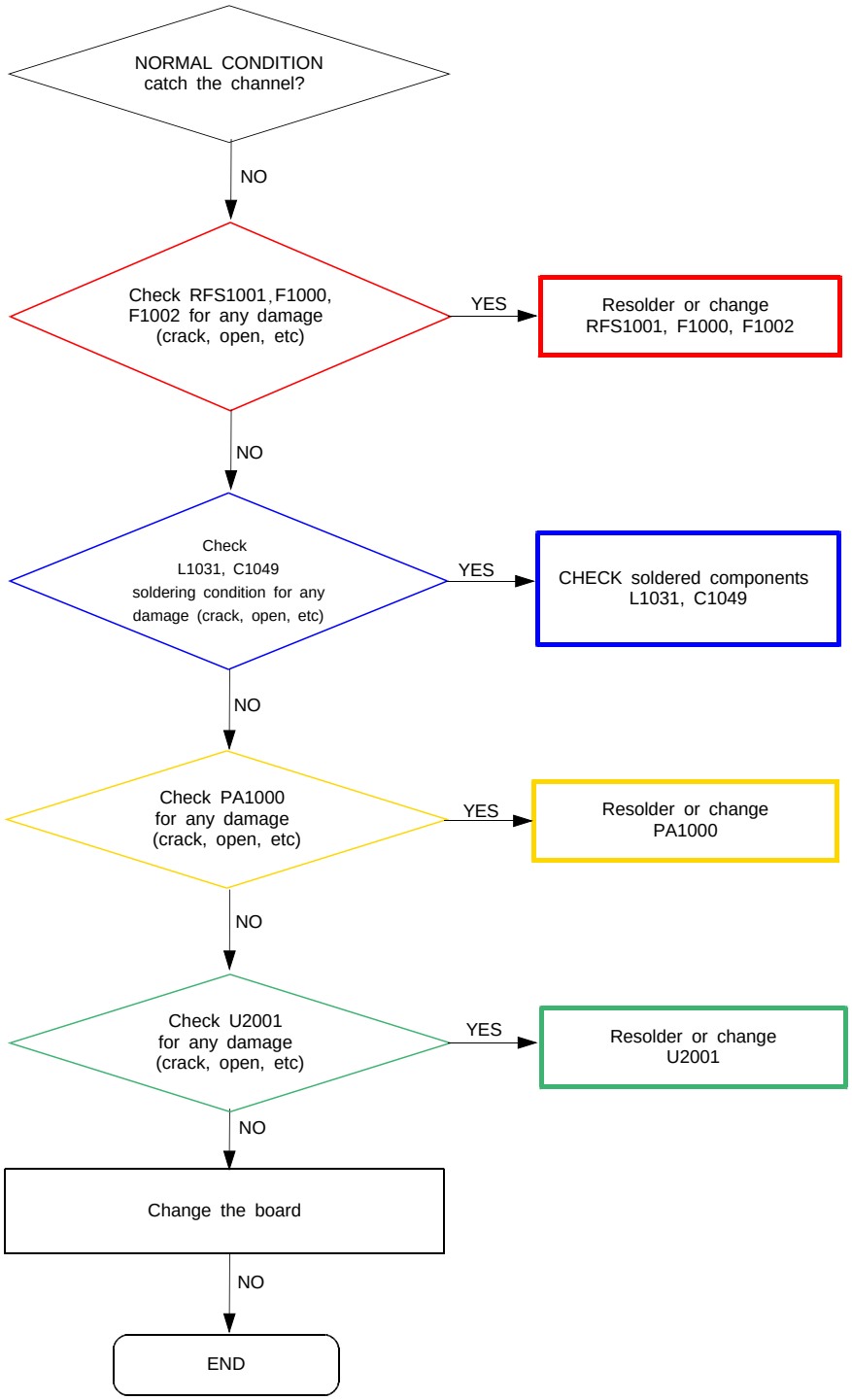

Confidential and proprietary-the contents in this service guide subject to change without prior notice.
Distribution, transmission, or infringement of any content or data from this document without Samsung's written authorization is strictly prohibited.

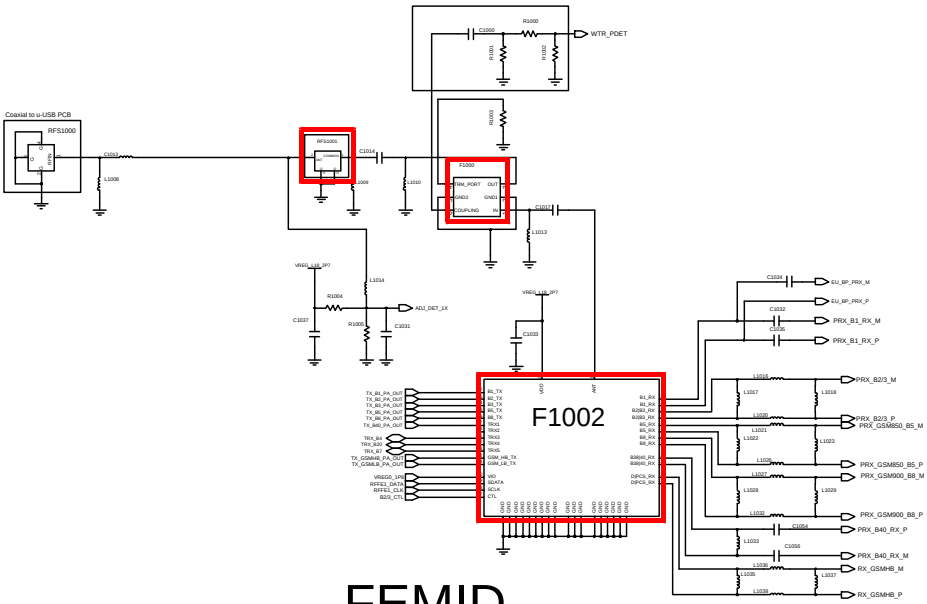

FEMID

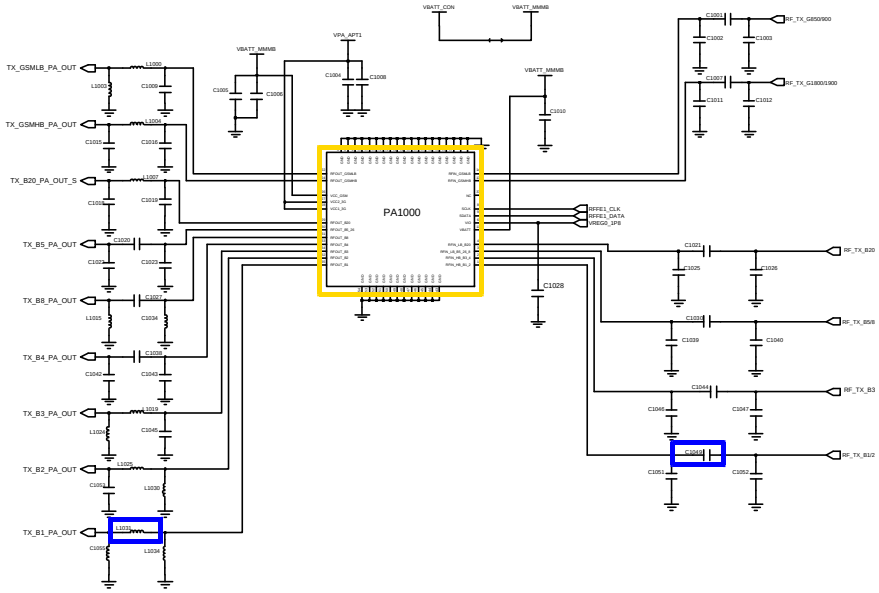

BAND1/2/3/5/8/20, GSM QUAD MMMB PA

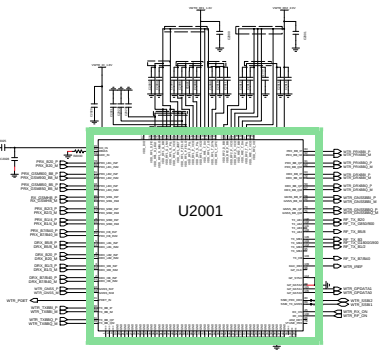

RF Transceiver

Confidential and proprietary-the contents in this service guide subject to change without prior notice.
Distribution, transmission, or infringement of any content or data from this document without Samsung's written authorization is strictly prohibited.

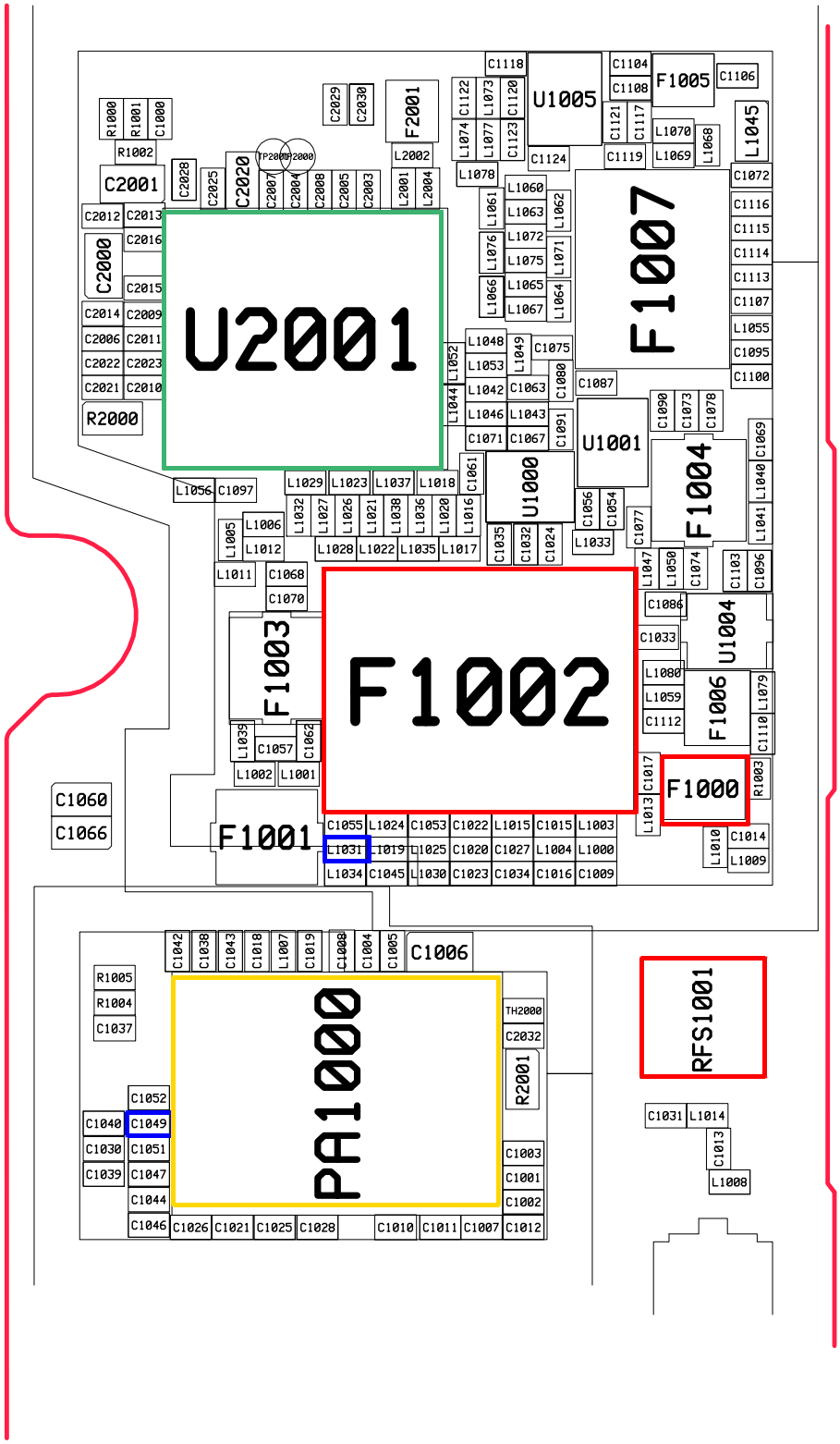

Confidential and proprietary-the contents in this service guide subject to change without prior notice.
Distribution, transmission, or infringement of any content or data from this document without Samsung's written authorization is strictly prohibited.

8-3-28. WCDMA B2 TX

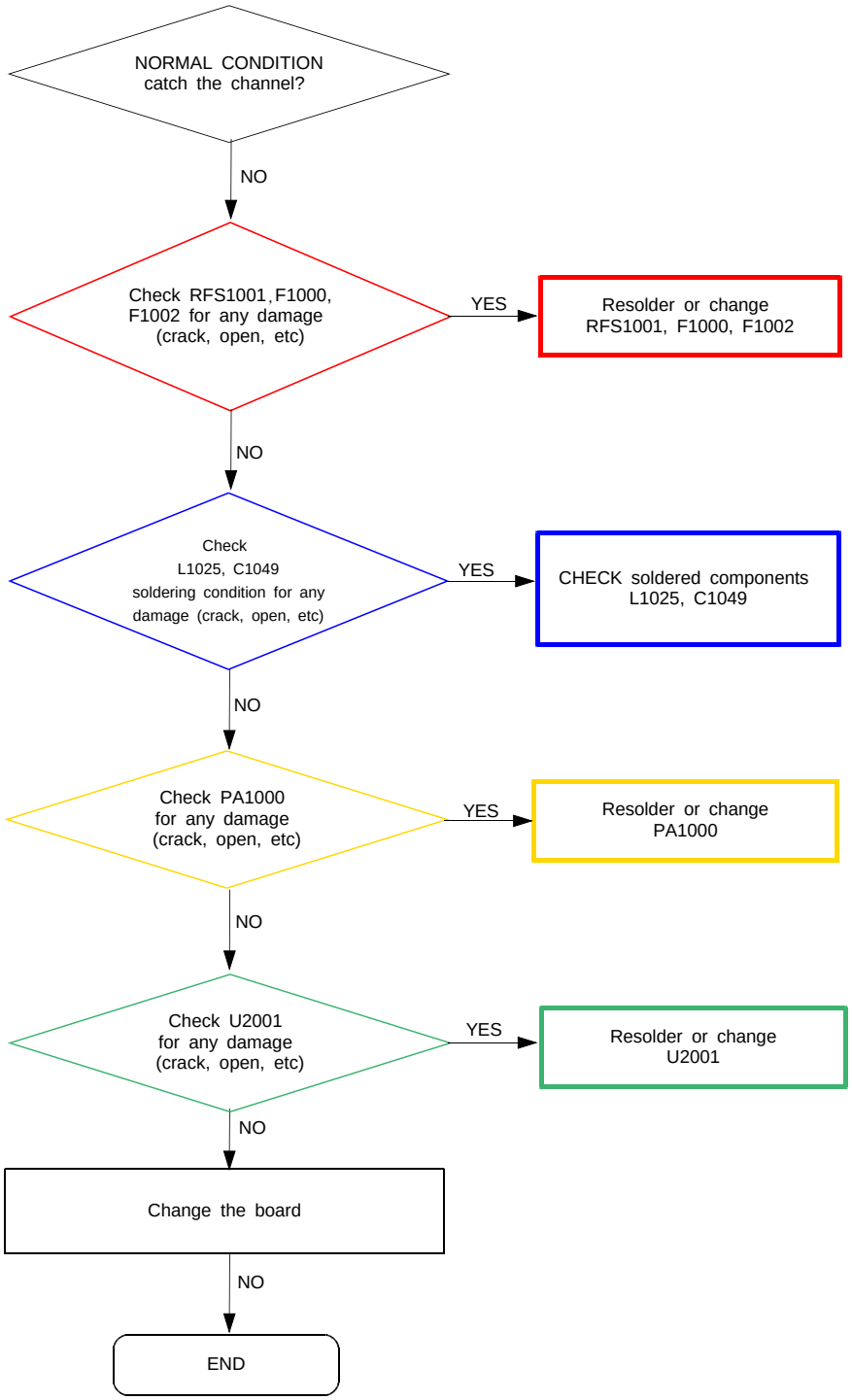

Confidential and proprietary-the contents in this service guide subject to change without prior notice.
Distribution, transmission, or infringement of any content or data from this document without Samsung's written authorization is strictly prohibited.

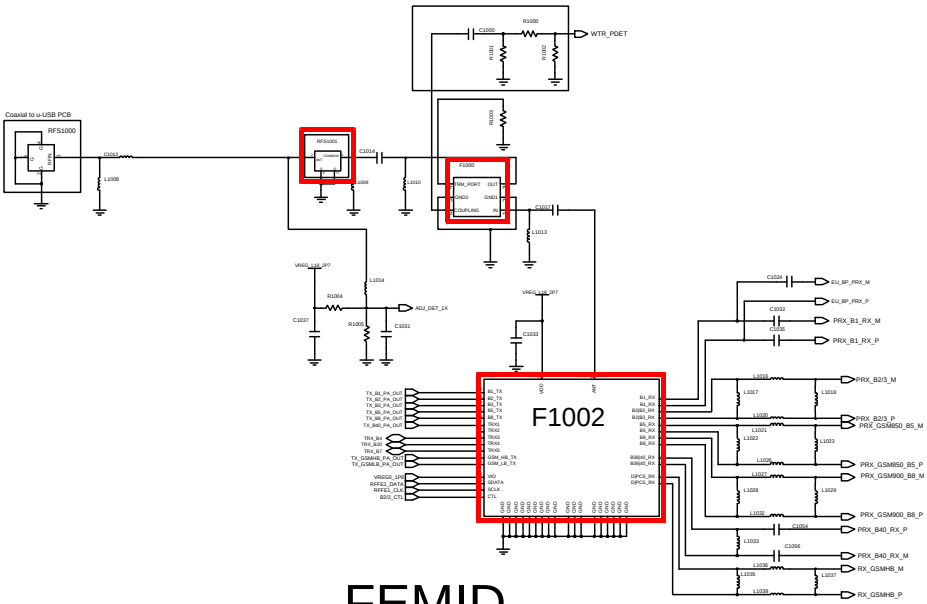

FEMID

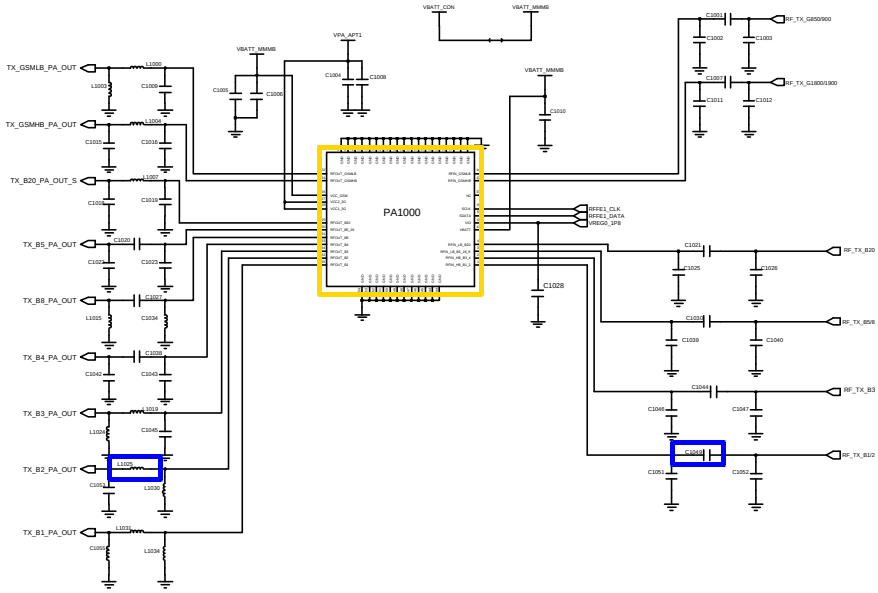

BAND1/2/3/5/8/20, GSM QUAD MMMB PA

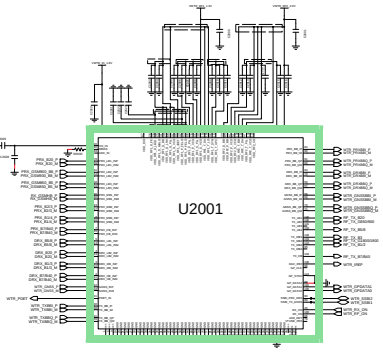

RF Transceiver

Confidential and proprietary-the contents in this service guide subject to change without prior notice.
Distribution, transmission, or infringement of any content or data from this document without Samsung's written authorization is strictly prohibited.

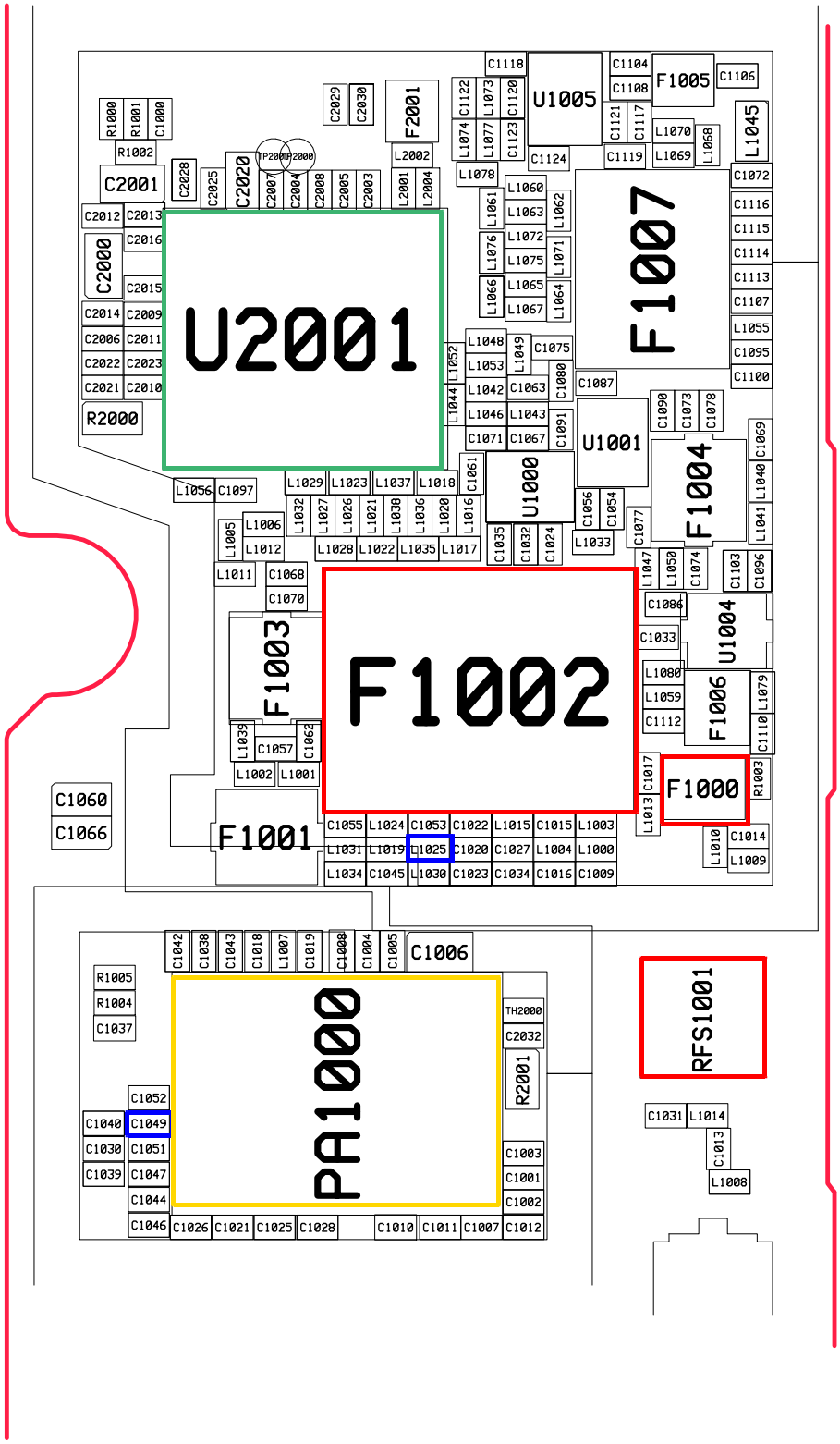

Confidential and proprietary-the contents in this service guide subject to change without prior notice.
Distribution, transmission, or infringement of any content or data from this document without Samsung's written authorization is strictly prohibited.

8-3-29. WCDMA B5 / LTE5 TX

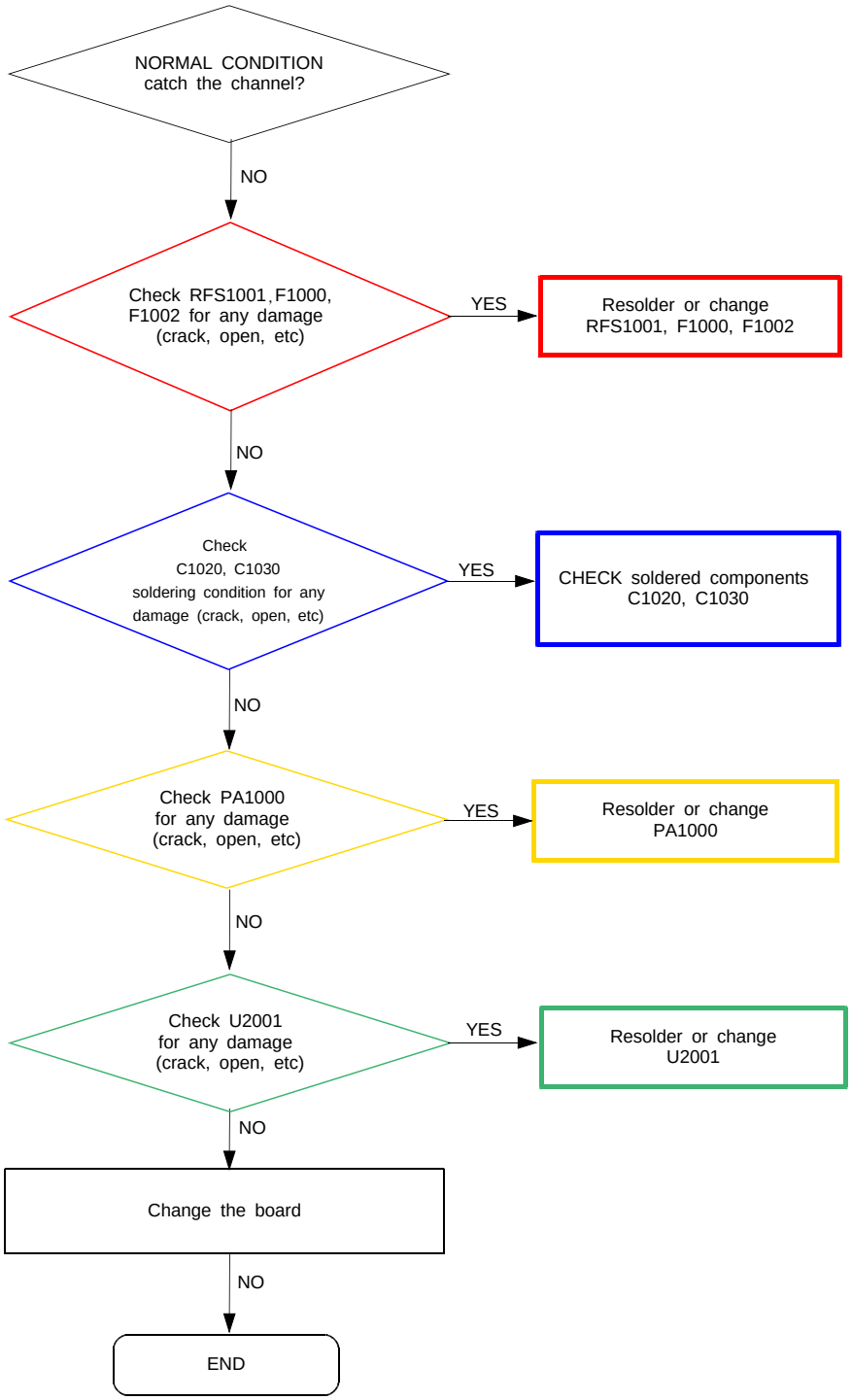

Confidential and proprietary-the contents in this service guide subject to change without prior notice.
Distribution, transmission, or infringement of any content or data from this document without Samsung's written authorization is strictly prohibited.

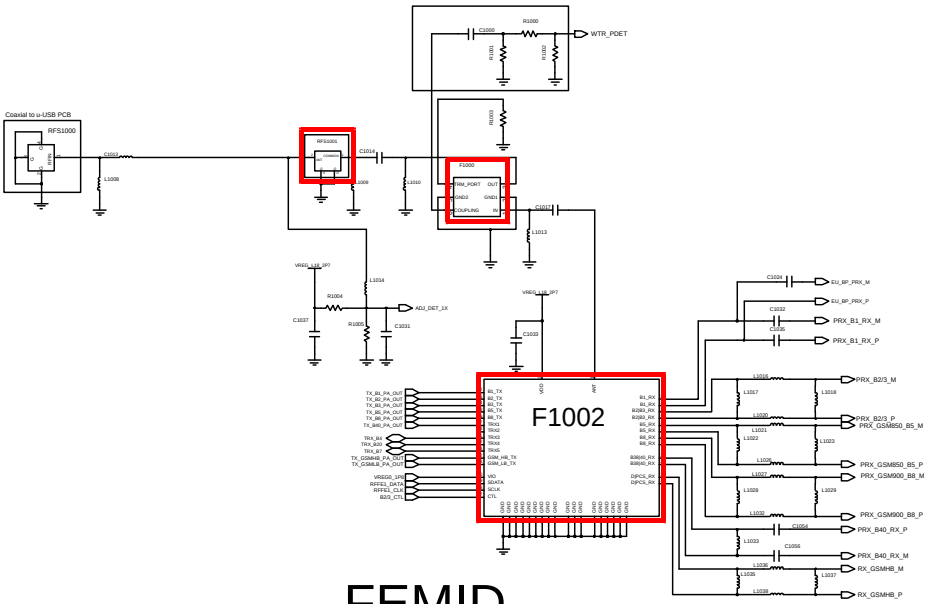

FEMID

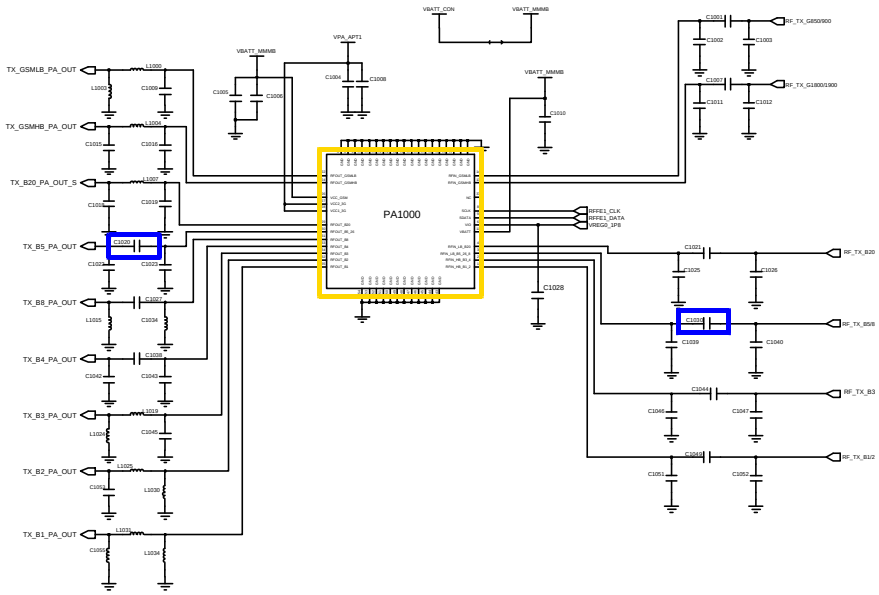

BAND1/2/3/5/8/20, GSM QUAD MMMB PA

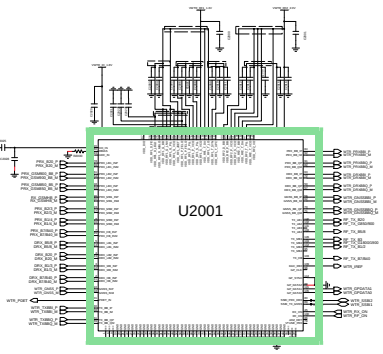

RF Transceiver

Confidential and proprietary-the contents in this service guide subject to change without prior notice.
Distribution, transmission, or infringement of any content or data from this document without Samsung's written authorization is strictly prohibited.

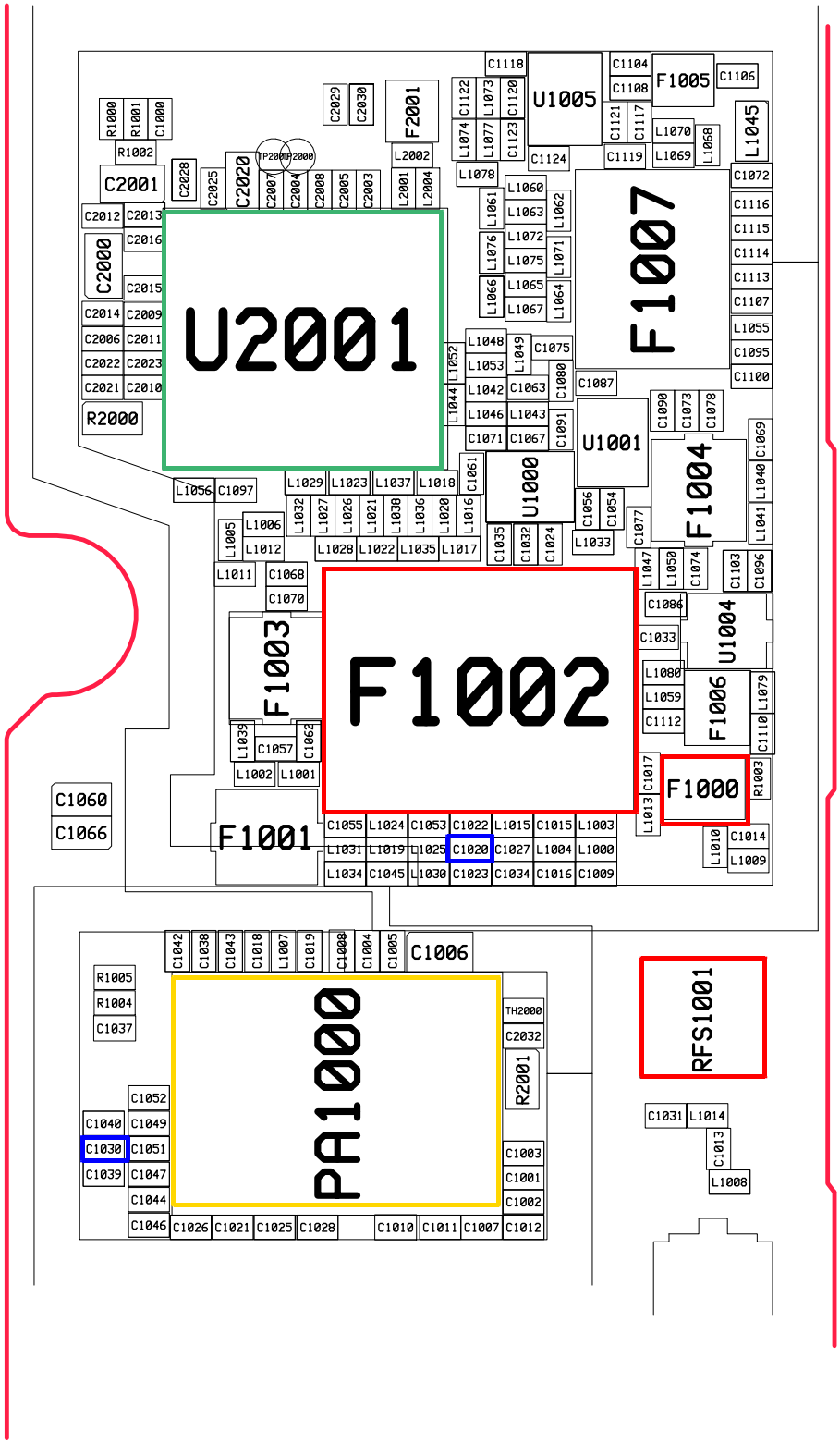

Confidential and proprietary-the contents in this service guide subject to change without prior notice.
Distribution, transmission, or infringement of any content or data from this document without Samsung's written authorization is strictly prohibited.

8-3-30. WCDMA B8 / LTE8 TX

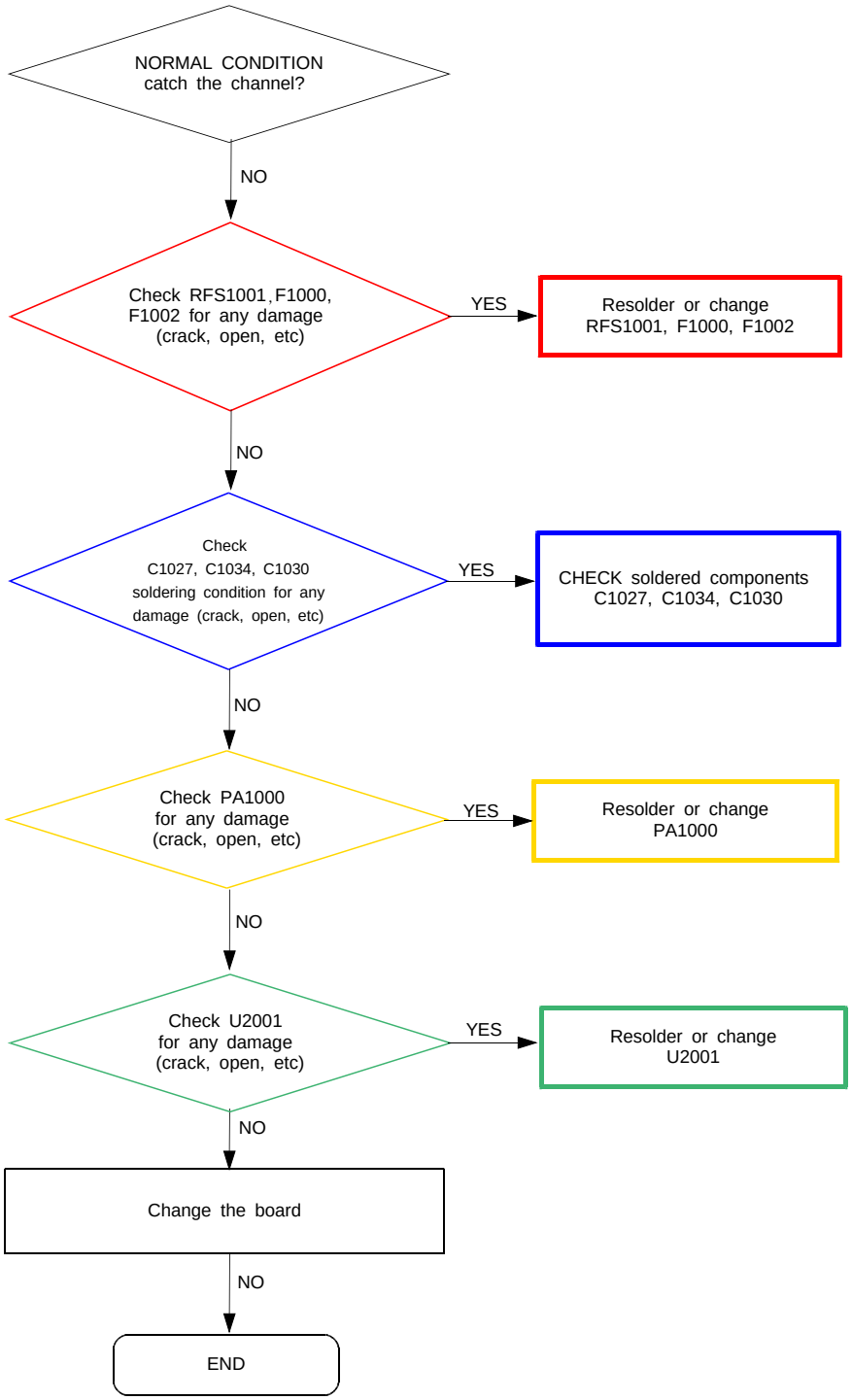

Confidential and proprietary-the contents in this service guide subject to change without prior notice.
Distribution, transmission, or infringement of any content or data from this document without Samsung's written authorization is strictly prohibited.

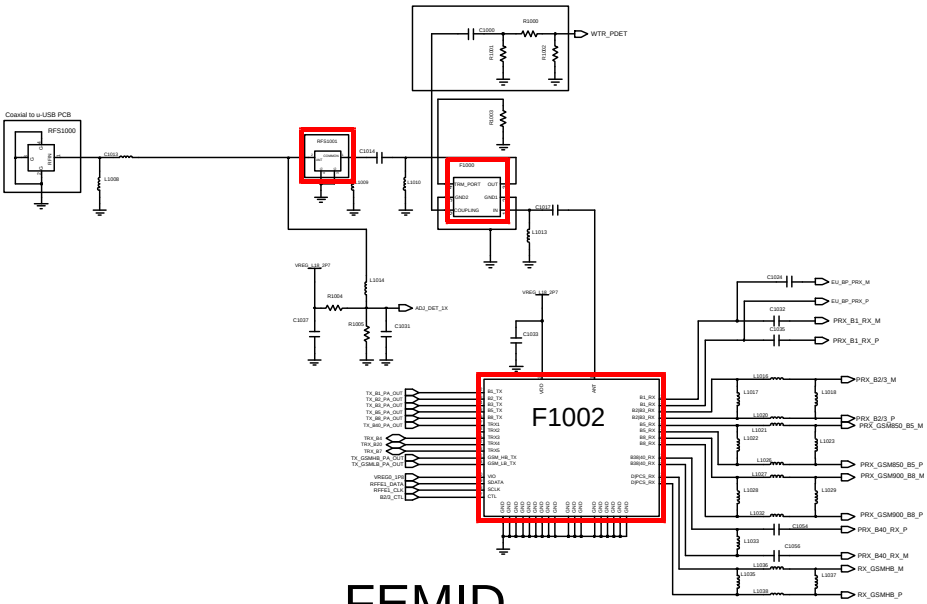

FEMID

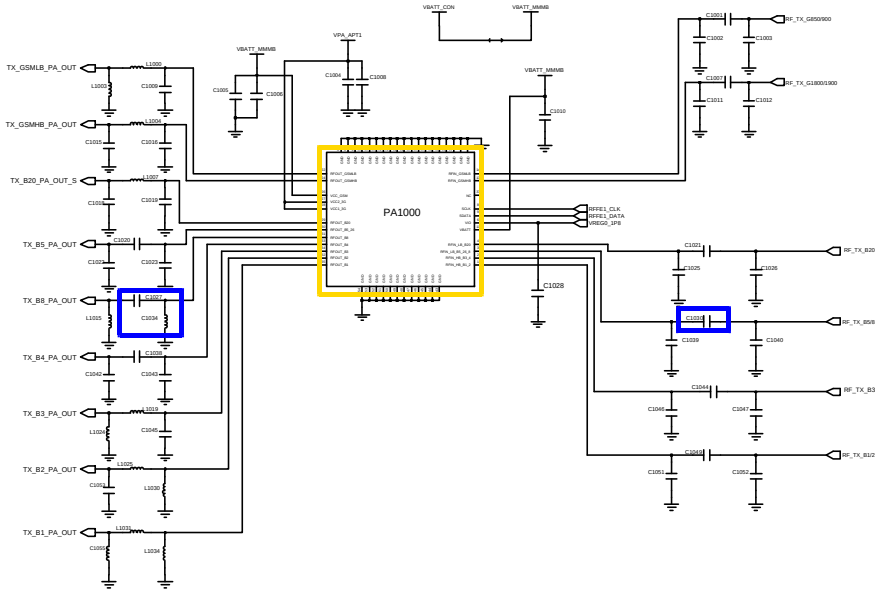

BAND1/2/3/5/8/20, GSM QUAD MMMB PA

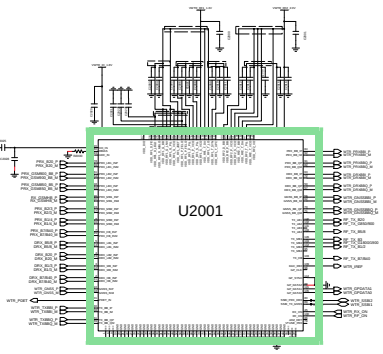

RF Transceiver

Confidential and proprietary-the contents in this service guide subject to change without prior notice.
Distribution, transmission, or infringement of any content or data from this document without Samsung's written authorization is strictly prohibited.

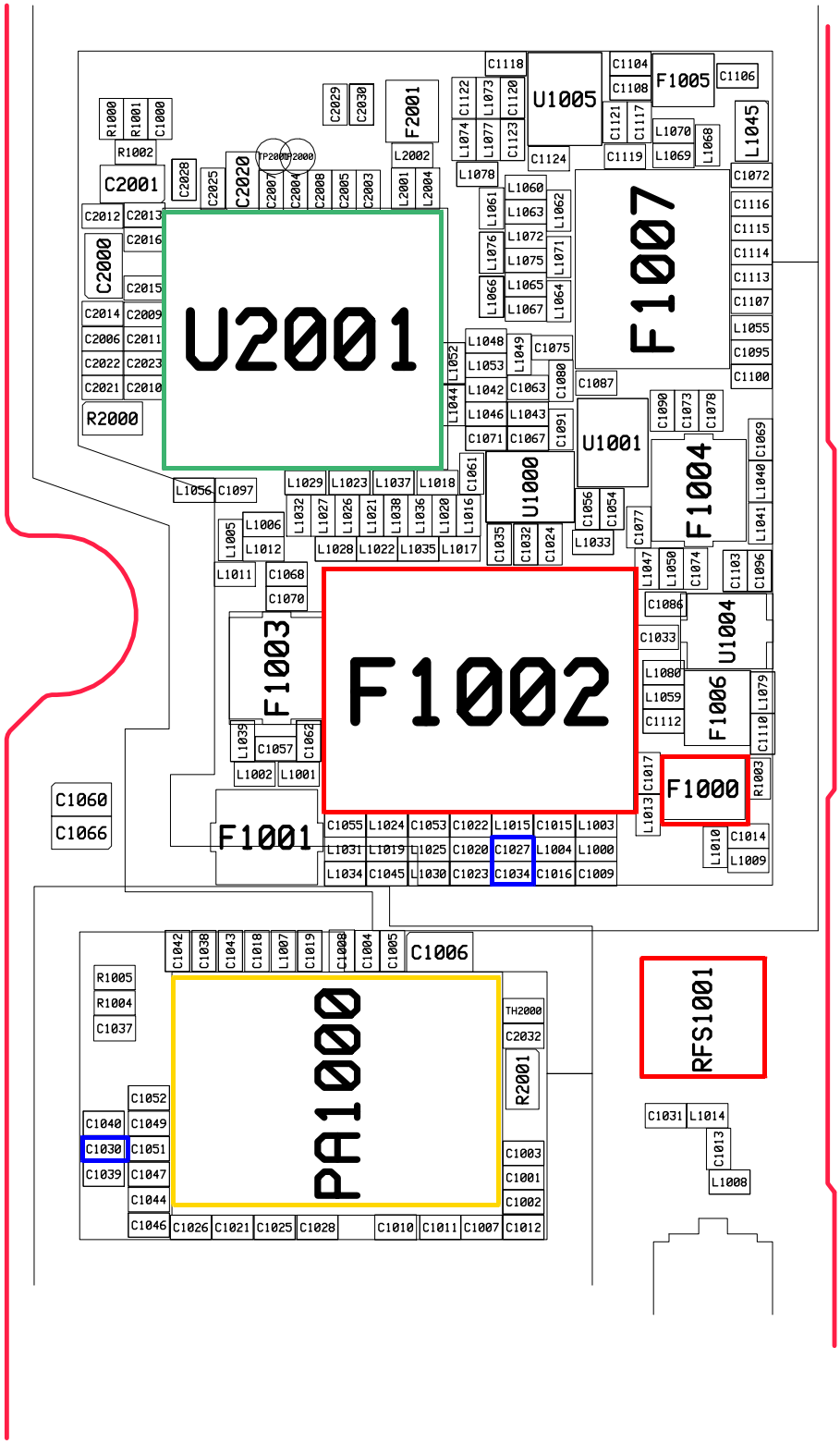

Confidential and proprietary-the contents in this service guide subject to change without prior notice.
Distribution, transmission, or infringement of any content or data from this document without Samsung's written authorization is strictly prohibited.

8-3-31. LTE3 TX

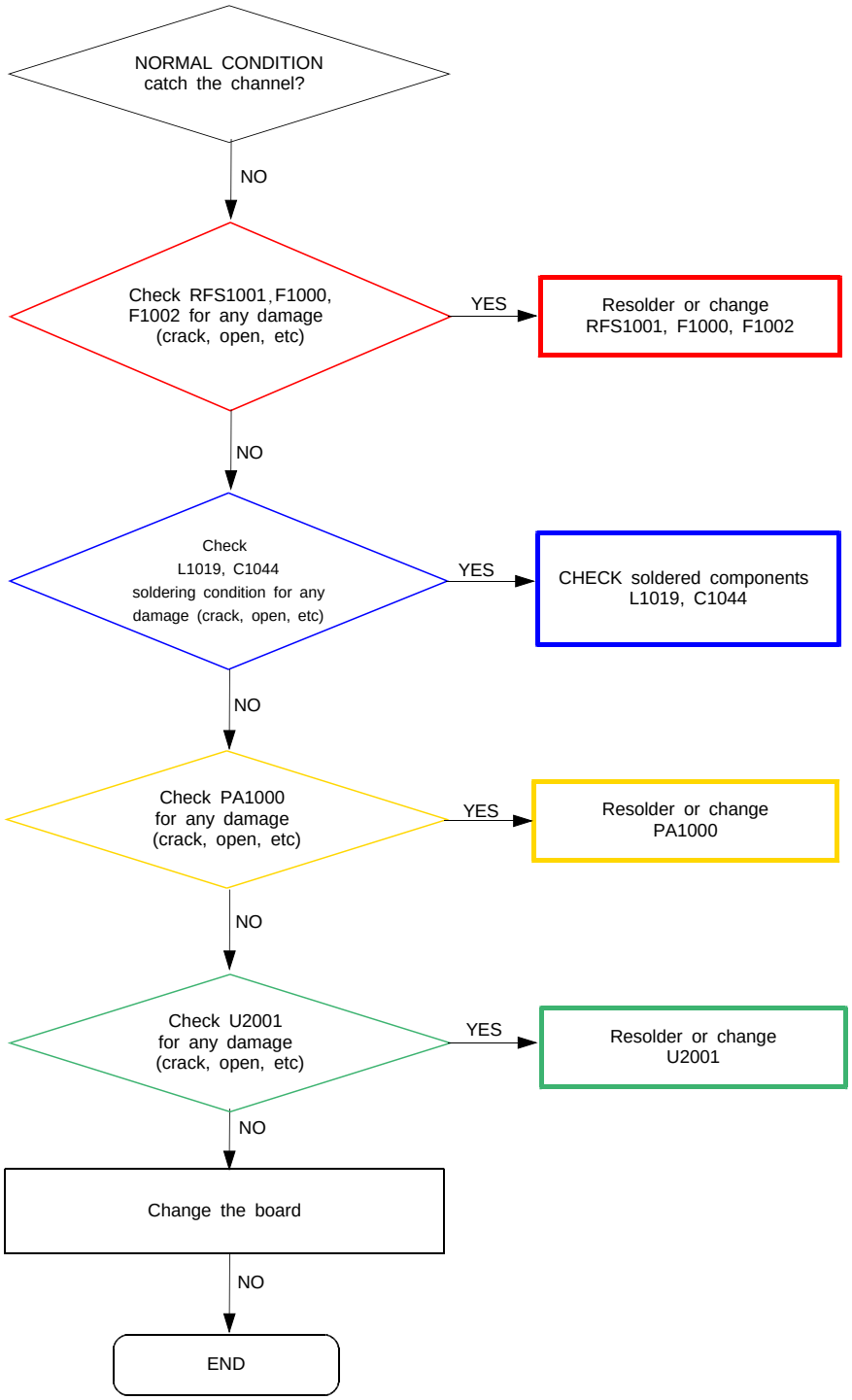

Confidential and proprietary-the contents in this service guide subject to change without prior notice.
Distribution, transmission, or infringement of any content or data from this document without Samsung's written authorization is strictly prohibited.

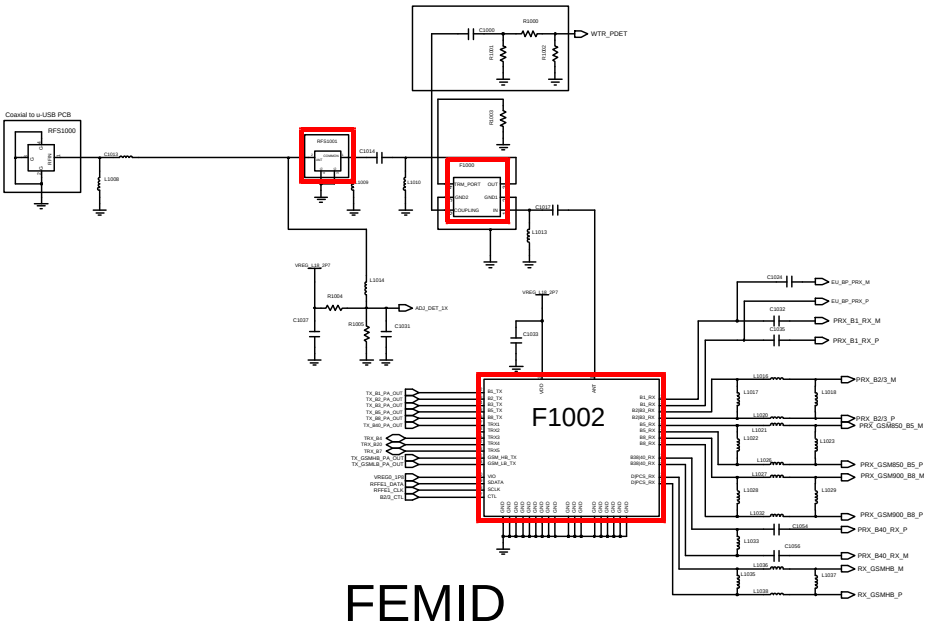

FEMID

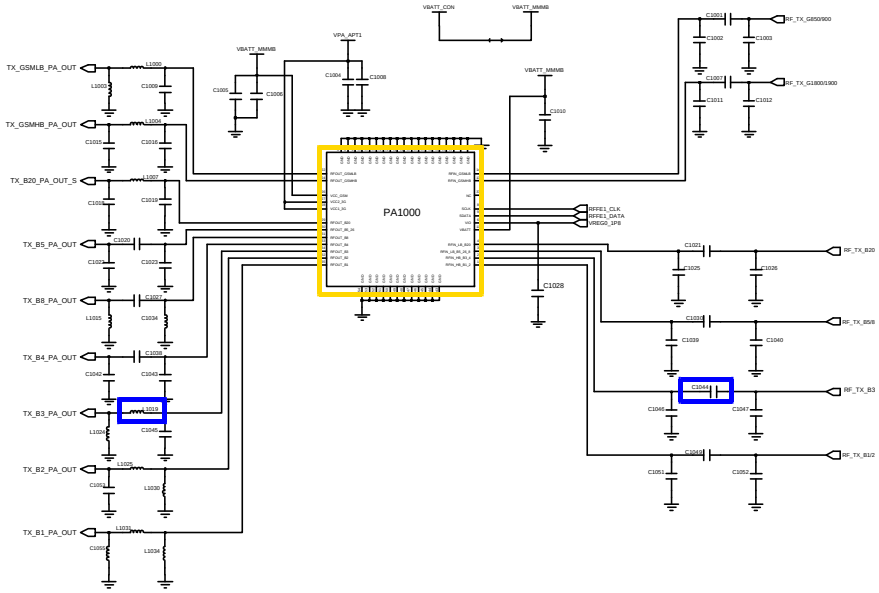

BAND1/2/3/5/8/20, GSM QUAD MMMB PA

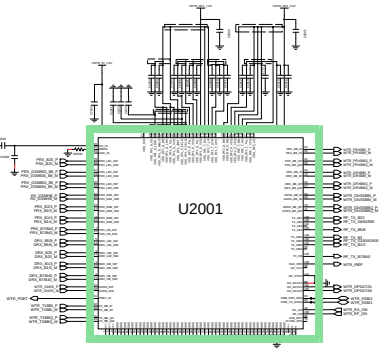

RF Transceiver

Confidential and proprietary-the contents in this service guide subject to change without prior notice.
Distribution, transmission, or infringement of any content or data from this document without Samsung's written authorization is strictly prohibited.

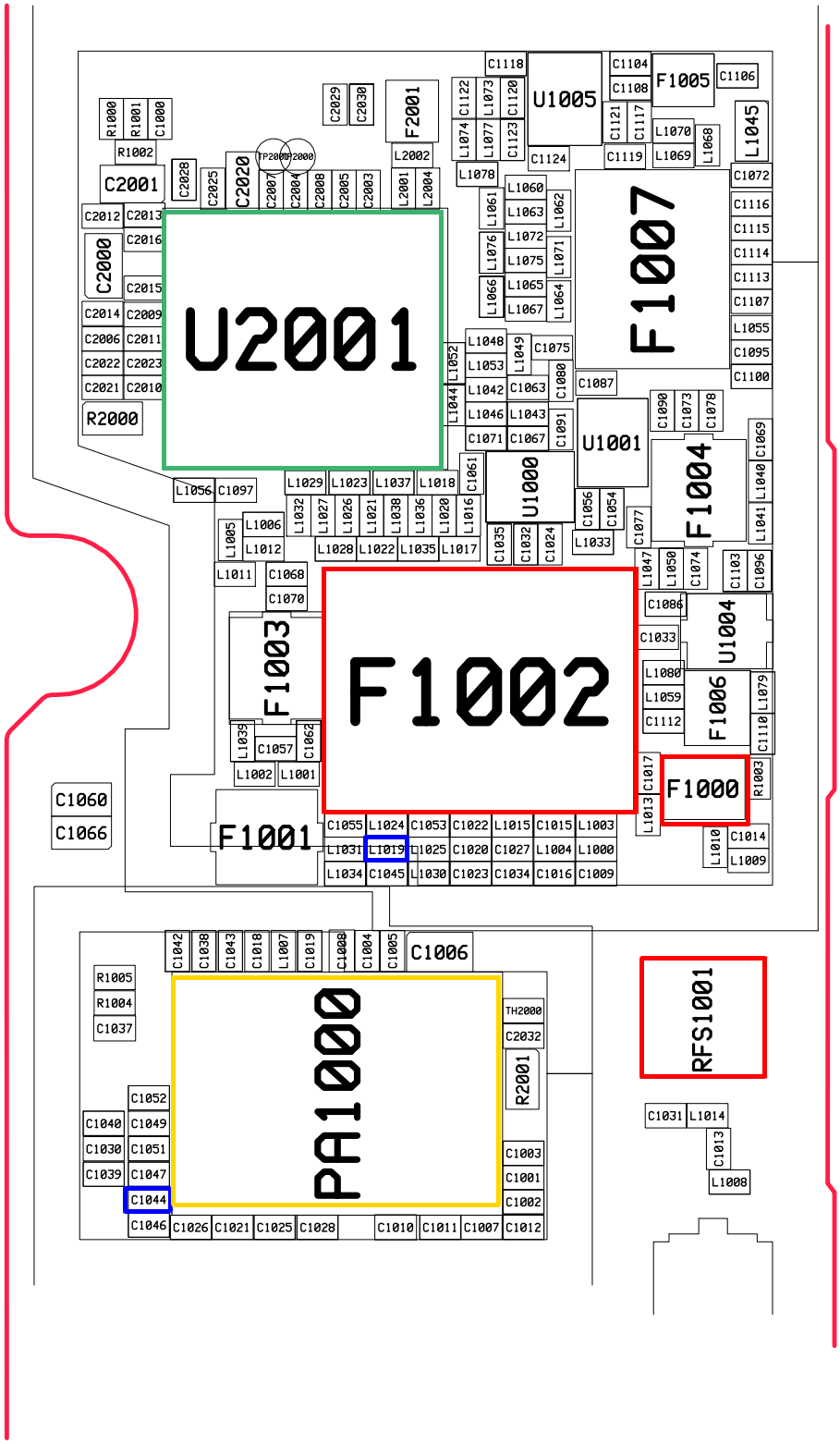

Confidential and proprietary-the contents in this service guide subject to change without prior notice.
Distribution, transmission, or infringement of any content or data from this document without Samsung's written authorization is strictly prohibited.

8-3-32. LTE7 TX

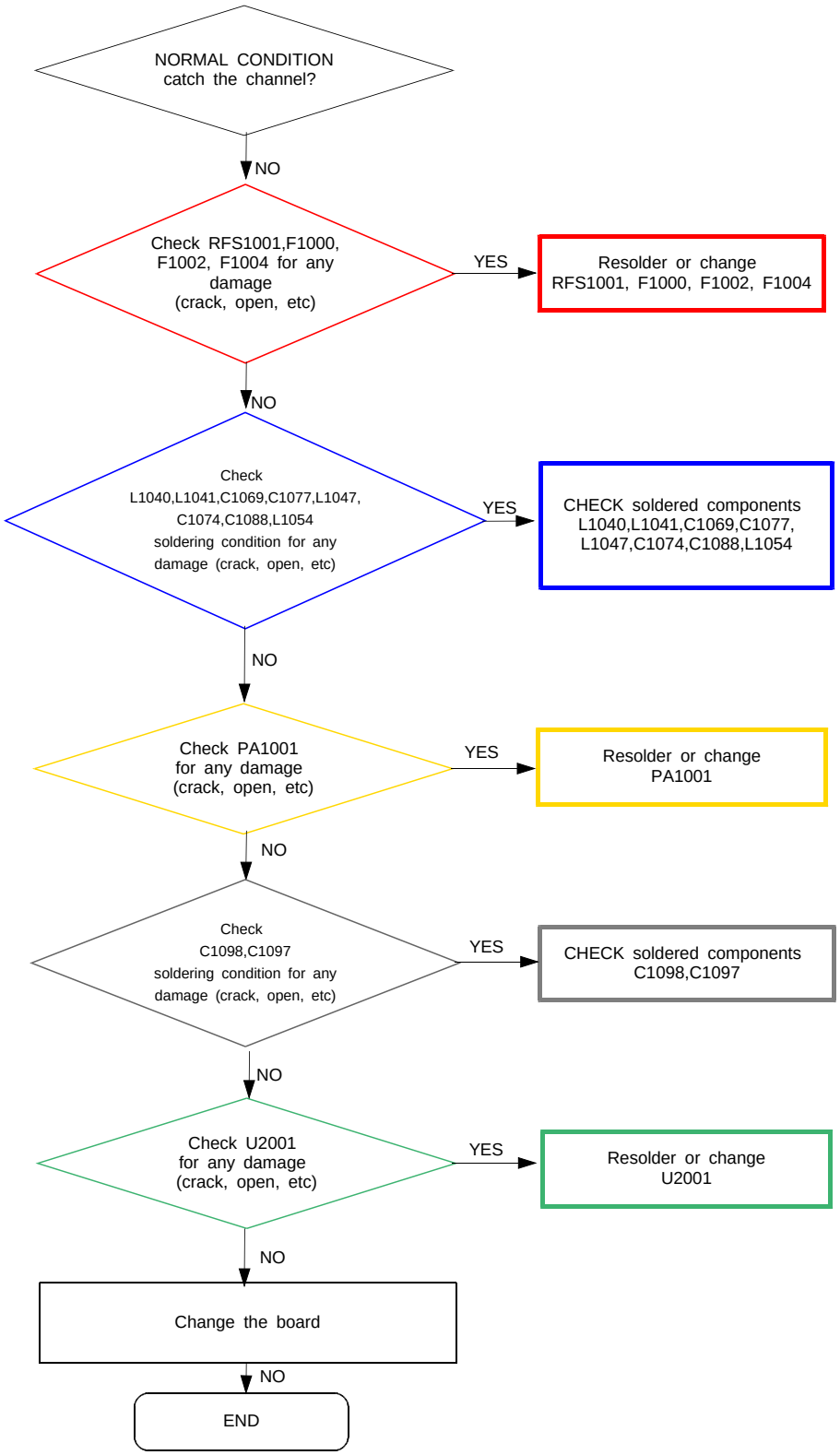

Confidential and proprietary-the contents in this service guide subject to change without prior notice.
Distribution, transmission, or infringement of any content or data from this document without Samsung's written authorization is strictly prohibited.

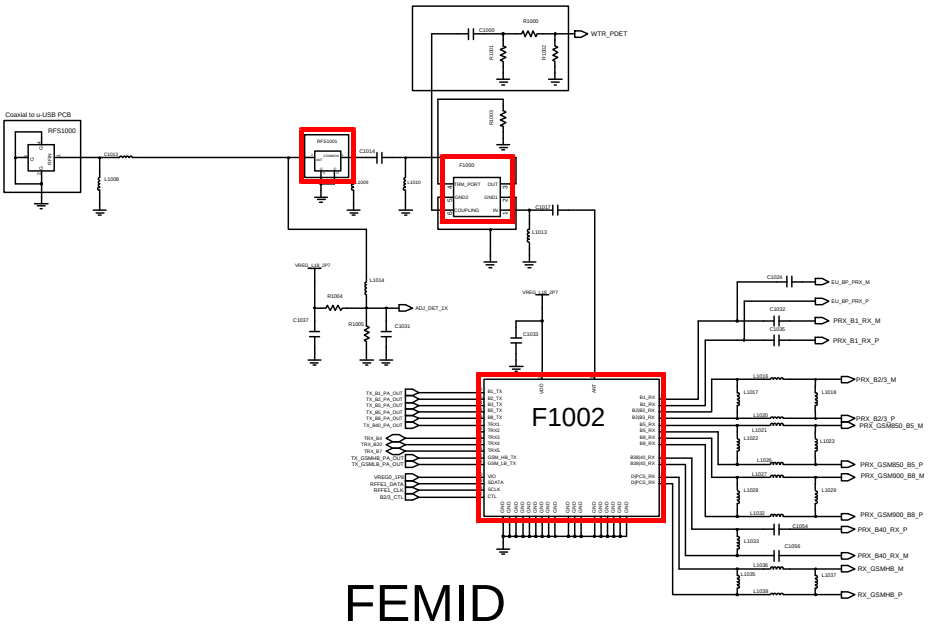

FEMID

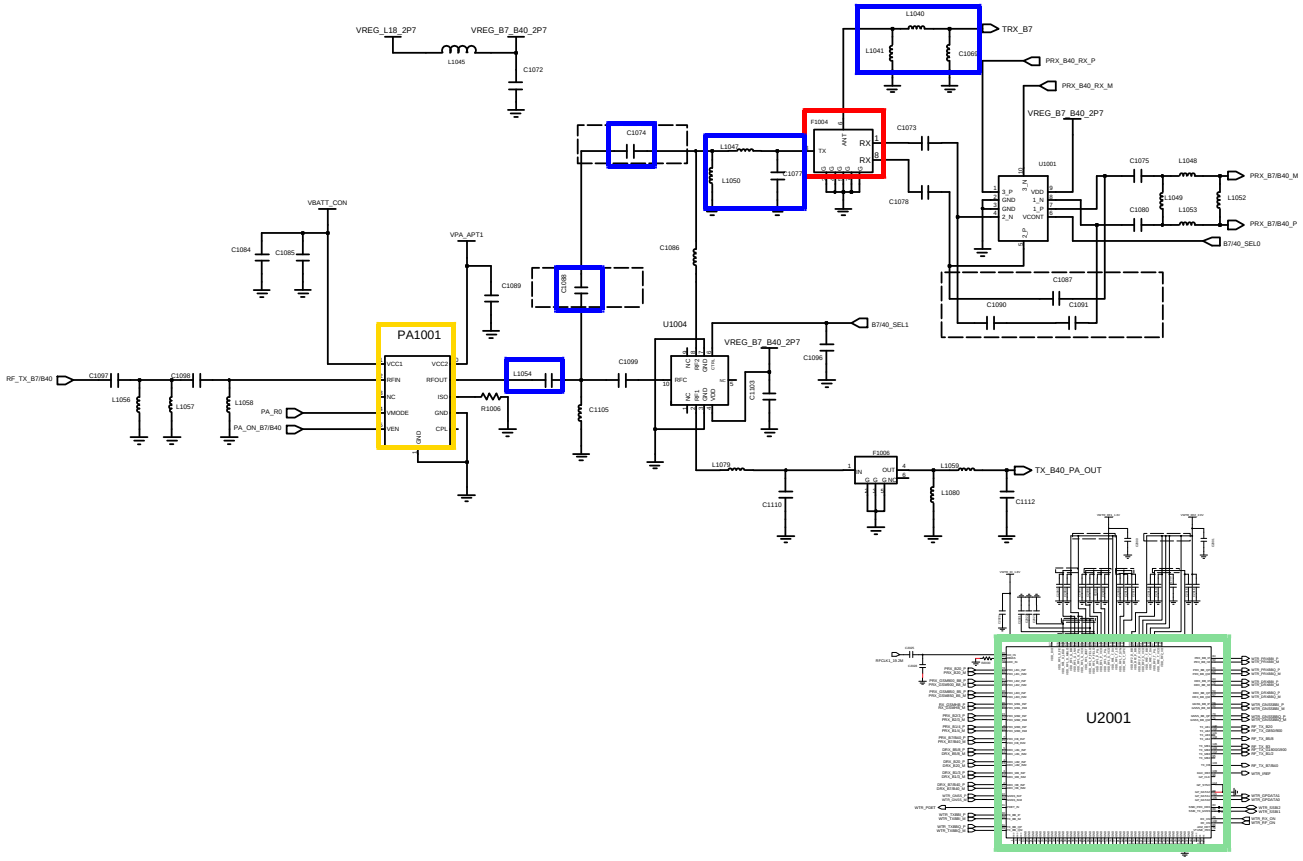

RF Transceiver

Confidential and proprietary-the contents in this service guide subject to change without prior notice.
Distribution, transmission, or infringement of any content or data from this document without Samsung's written authorization is strictly prohibited.

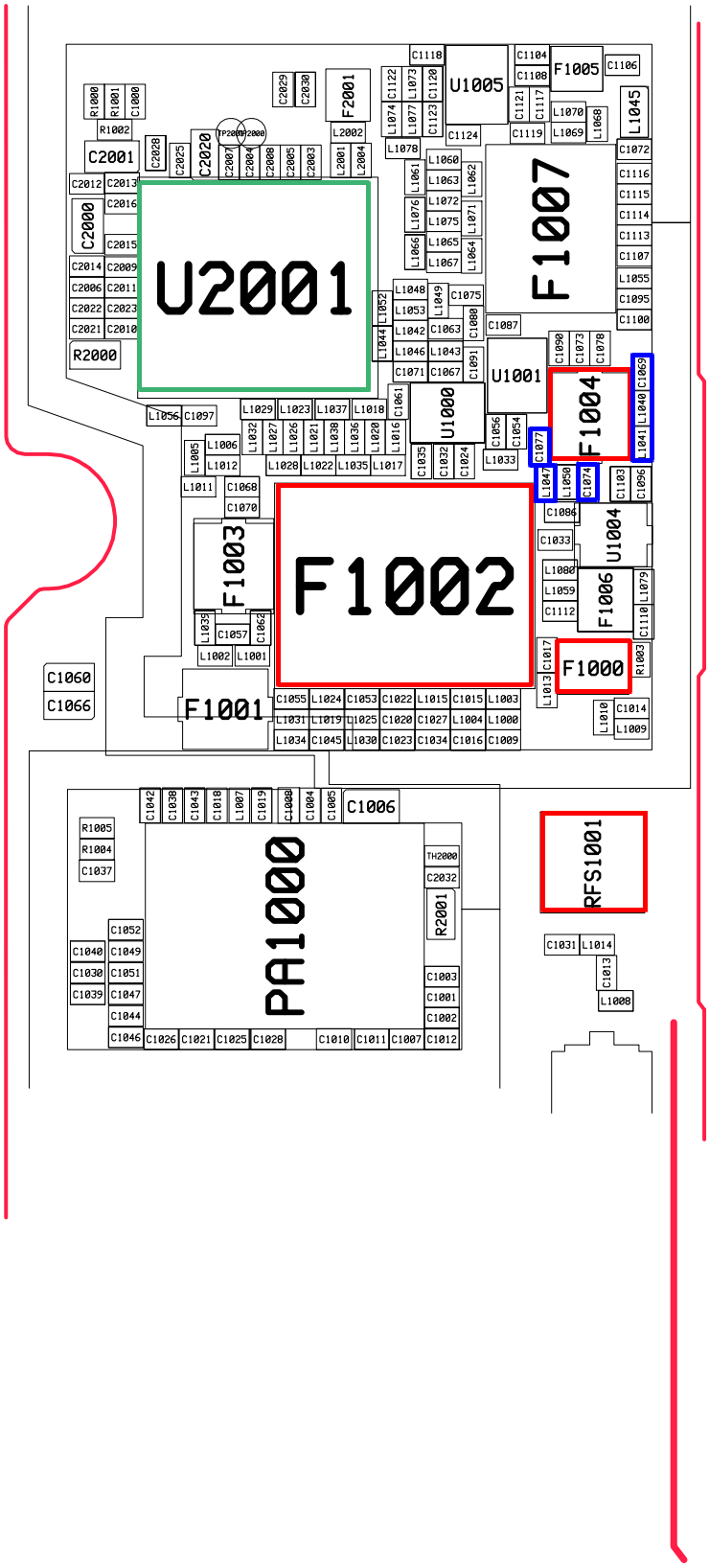

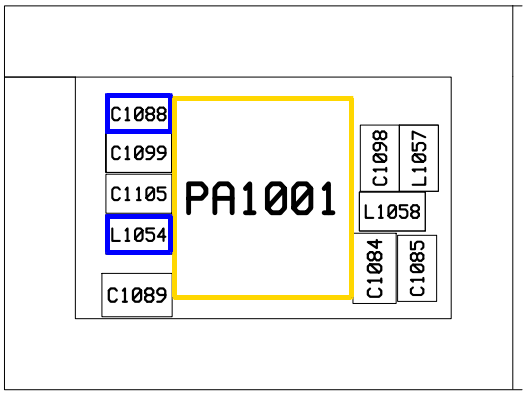

Confidential and proprietary-the contents in this service guide subject to change without prior notice.
Distribution, transmission, or infringement of any content or data from this document without Samsung's written authorization is strictly prohibited.

8-3-33. LTE20 TX

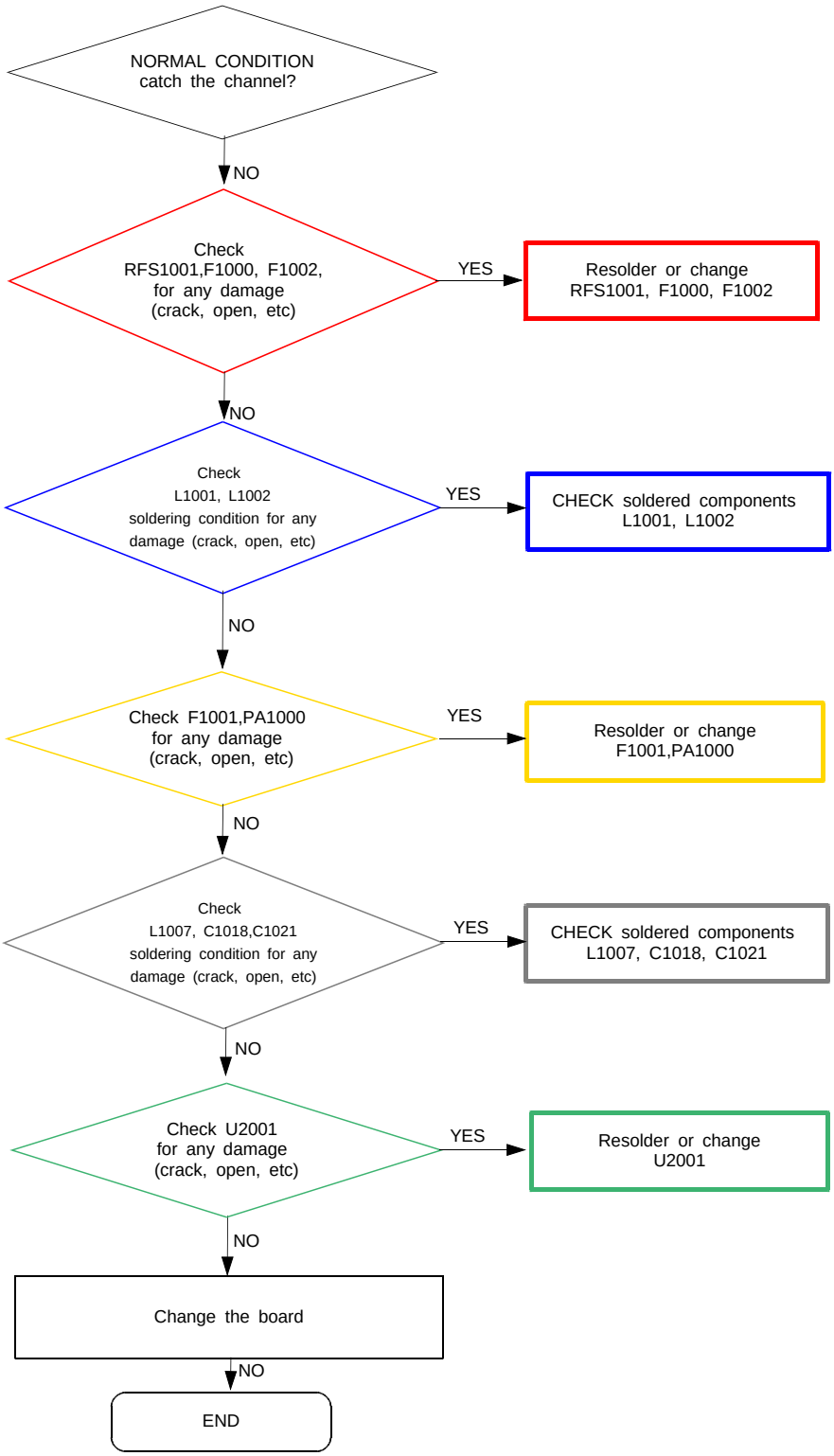

Confidential and proprietary-the contents in this service guide subject to change without prior notice.
Distribution, transmission, or infringement of any content or data from this document without Samsung's written authorization is strictly prohibited.

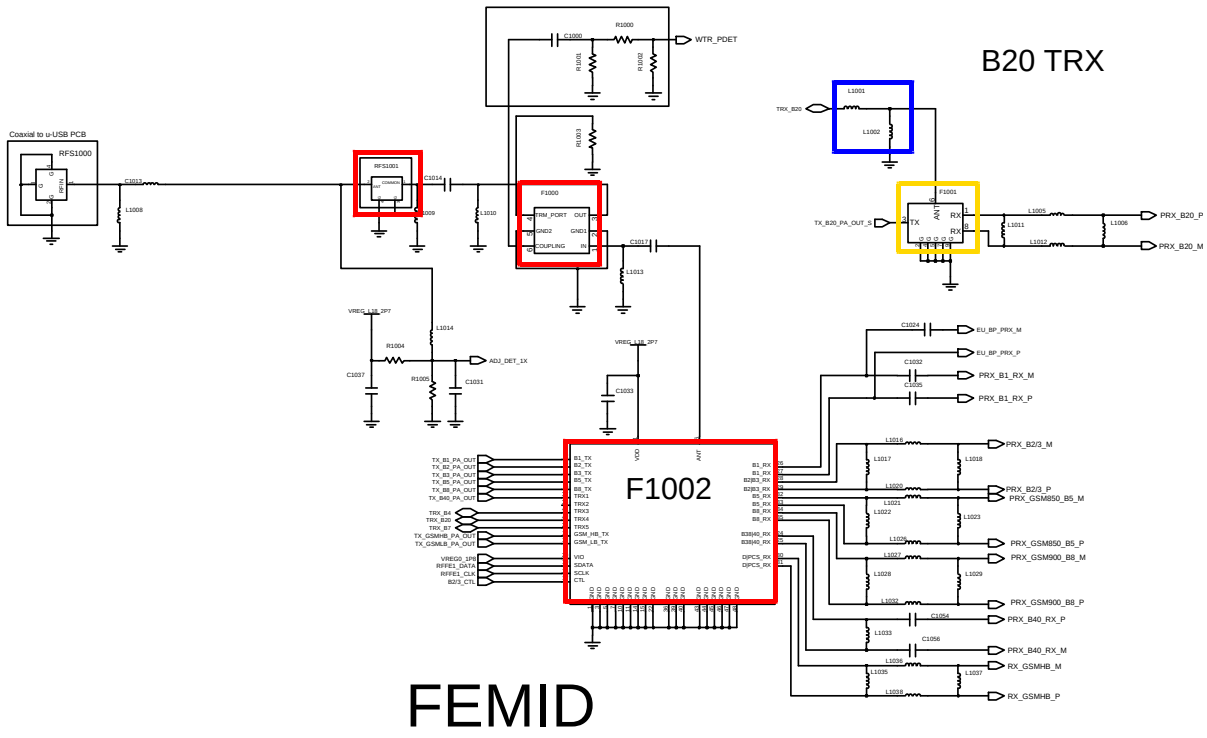

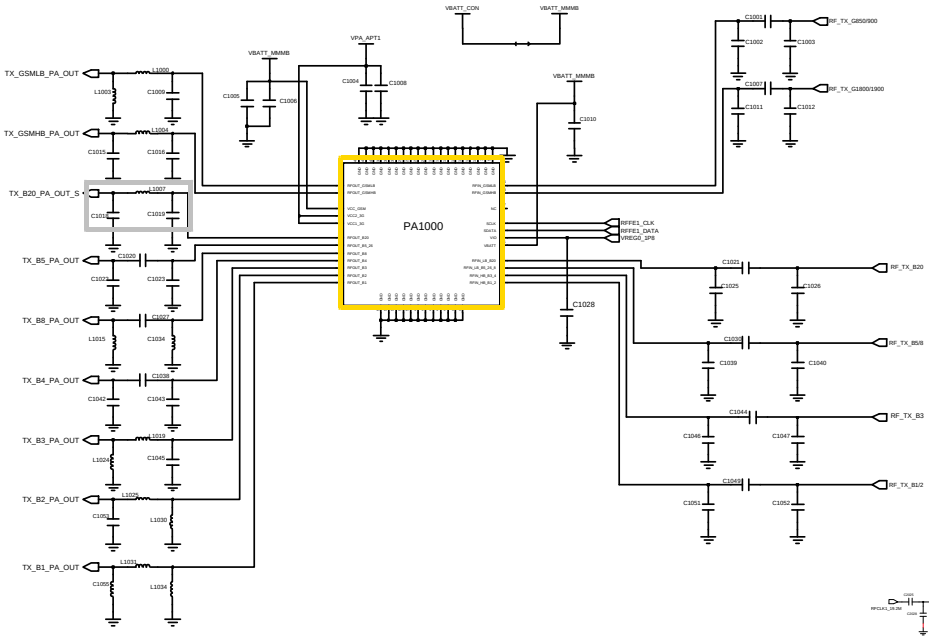

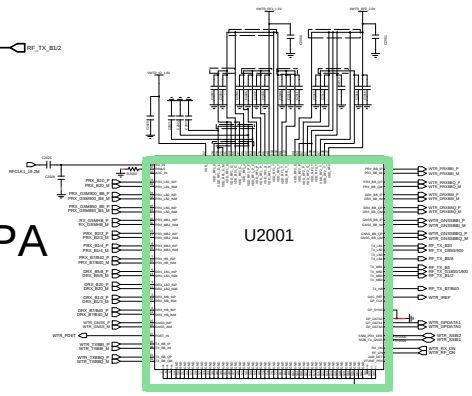

Confidential and proprietary-the contents in this service guide subject to change without prior notice.
Distribution, transmission, or infringement of any content or data from this document without Samsung's written authorization is strictly prohibited.

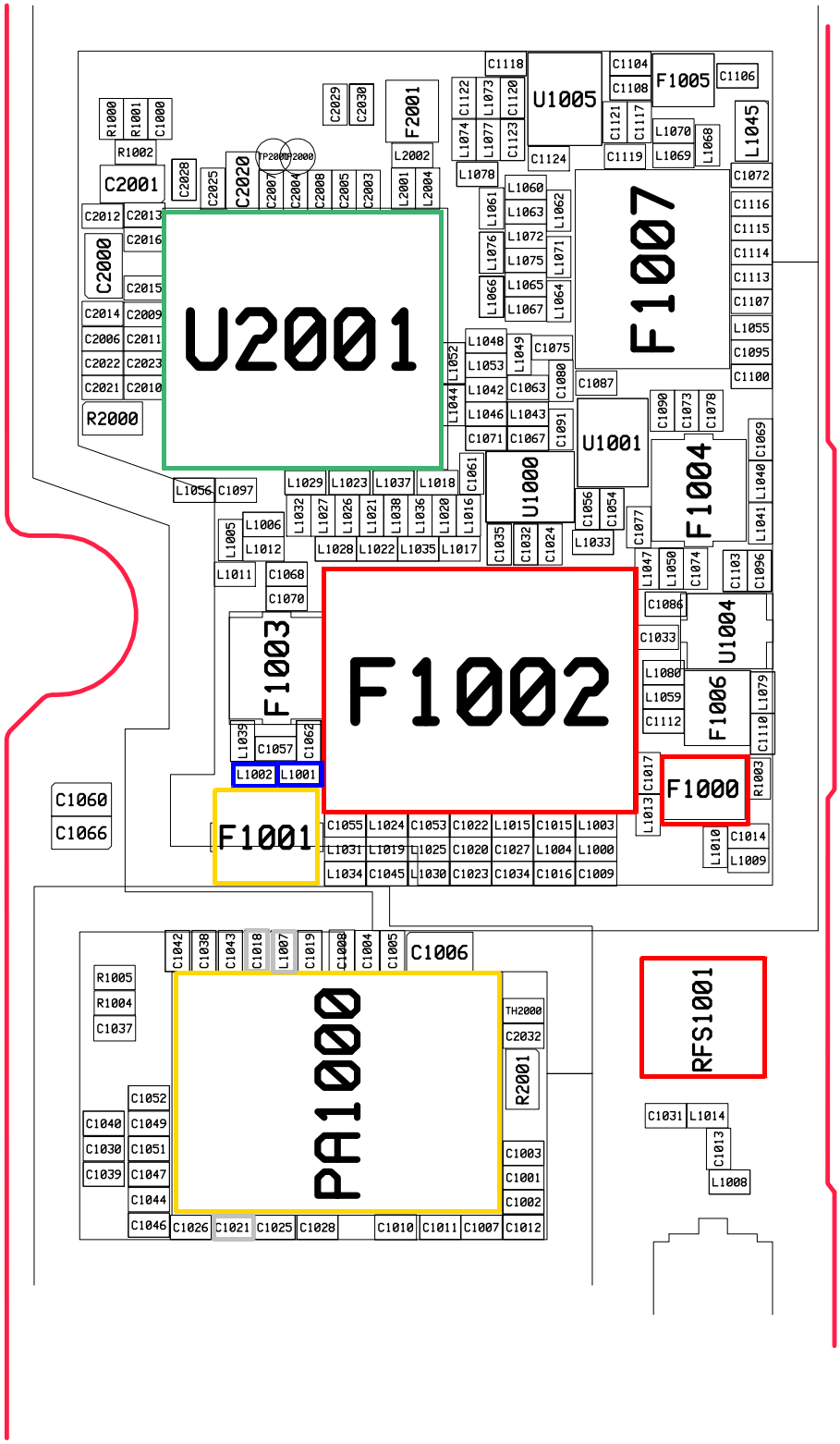

Confidential and proprietary-the contents in this service guide subject to change without prior notice.
Distribution, transmission, or infringement of any content or data from this document without Samsung's written authorization is strictly prohibited.

-NC Point(Top View)

●: NC

	1	2	3	4	5	6	7	8	9	10	11	12	13	14
A														
B														
C	●													●
D	●								●	●	●	●	●	●
E	●	●	●	●	●	●	●	●	●	●	●	●	●	●
F	●					●	●							●
G	●					●	●							●
H	●					●	●							●
I	●					●	●							●
J	●					●	●							●
K	●					●	●							●
L	●					●	●							●
M	●					●	●							●
N	●					●	●							●
P	●					●	●							●
R	●					●	●							●
T	●					●	●							●
U	●					●	●							●
V	●					●	●							●
W	●					●	●							●
Y	●					●	●							●
AA						●	●							
AB						●	●							

UME4000

Confidential and proprietary-the contents in this service guide subject to change without prior notice.
Distribution, transmission, or infringement of any content or data from this document without Samsung's written authorization is strictly prohibited.

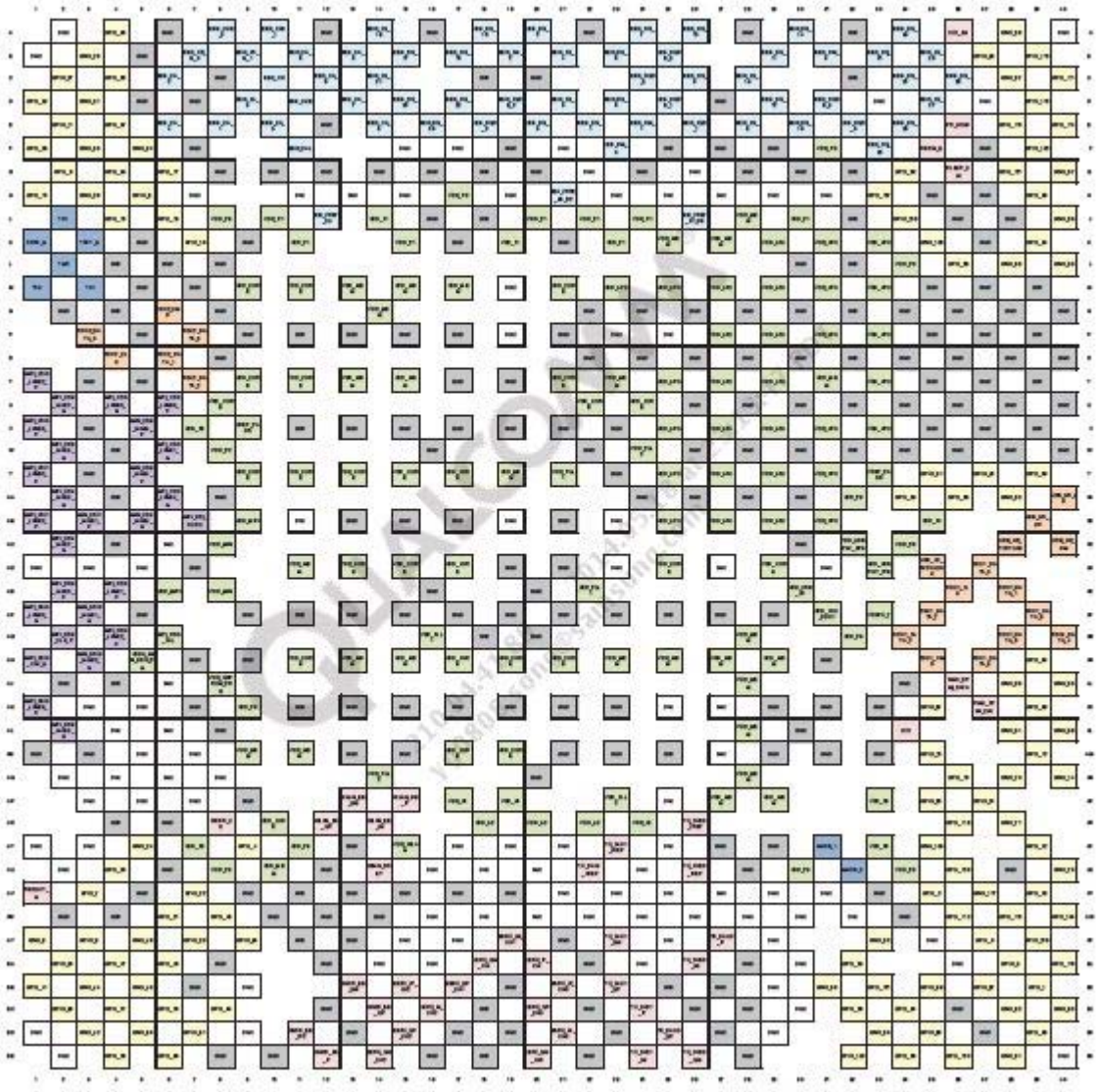

UCP3000

Confidential and proprietary-the contents in this service guide subject to change without prior notice.
Distribution, transmission, or infringement of any content or data from this document without Samsung's written authorization is strictly prohibited.

	1	2	3	4	5	6	7	8	9	10	11	12	13	14
A														
B														
C										●				
D								●	●					
E						●								
F				●		●								
G														
H	●			●					●					●
J									●					
K						●	●					●		
L					●	●	●		●					
M														●
N														
P											●			

U4000

Confidential and proprietary-the contents in this service guide subject to change without prior notice.
Distribution, transmission, or infringement of any content or data from this document without Samsung's written authorization is strictly prohibited.

9. Reference Abbreviate

Reference Abbreviate

- **AAC**: Advanced Audio Coding.
- **AVC** : Advanced Video Coding.
- **BER** : Bit Error Rate
- **BPSK**: Binary Phase Shift Keying
- **CA** : Conditional Access
- **CDM** : Code Division Multiplexing
- **C/I** : Carrier to Interference
- **DMB** : Digital Multimedia Broadcasting
- **EN** : European Standard
- **ES** : Elementary Stream
- **ETSI**: European Telecommunications Standards Institute
- **MPEG**: Moving Picture Experts Group
- **PN** : Pseudo-random Noise
- **PS** : Pilot Symbol
- **QPSK**: Quadrature Phase Shift Keying
- **RS** : Reed-Solomon
- **SI** : Service Information
- **TDM** : Time Division Multiplexing
- **TS** : Transport Stream

Confidential and proprietary-the contents in this service guide subject to change without prior notice.
Distribution, transmission, or infringement of any content or data from this document without Samsung's written authorization is strictly prohibited.